1. Agenda

   Documents:

   111020 CC AGENDA.PDF

2. Meeting Materials

   Documents:

   111020 CC PACKET2.PDF

Grimes City Council Agenda

Grimes City Hall
101 NE Harvey Street
Grimes, Iowa 50111
Phone | 515.986.3036
www.grimesiowa.gov

Mission Statement
The mission of Grimes City Government is to provide excellent/exceptional city services and facilities in a financially responsible and community-friendly manner through a high performing city team that result in adding value to resident's lives.

Mayor | Scott Mikkelsen
City Council | Jill Altringer, Eric Johansen, Andy Borcherding, David Gisch, Ryan Burger

Electronic Meeting as Provided Under Iowa Code, Chapter 21*
This meeting will be held by Zoom and in Person at 410 SE Main Street, Grimes. Due to the National Health Emergency the Public is Encouraged to Attend via Zoom.

*Please note that this Grimes City Council Meeting will be an electronic meeting pursuant to Iowa Code Section 21.8 due to the national health emergency that makes it impossible or impractical for an in person meeting.

The public is welcome and encouraged to attend and participate in this meeting by either internet or phone or in person as follows:

1. Internet- Meeting attendance may be obtained by "Join Zoom Meeting". Simply enter the following internet address and ID:

Join Zoom Meeting
https://zoom.us/j/91682130634

Code 483932

2. By Phone:

One tap mobile
+13017158592,,95581681701# US (Germantown)
+13126266799,,95581681701# US (Chicago)

Dial by your location
+1 301 715 8592 US (Germantown)
+1 312 626 6799 US (Chicago)
+1 646 558 8656 US (New York)
+1 253 215 8782 US (Tacoma)
+1 346 248 7799 US (Houston)
+1 669 900 9128 US (San Jose)
Meeting ID: 955 8168 1701

3. Public Comment : If you would like to address the City Council during the Public Comment portion of the meeting, please contact the City Clerk by 4:30 p.m. on the date of the meeting by email at rwilliams@grimesiowa.gov with your name and address or by using the RAISE HAND feature by zoom. Participants must be recognized by the presiding officer and must state their full

name and address before addressing the City Council. If you are participating via phone, the raise and lower hand feature can be activated by using *9. After you are recognized, use *6 to unmute your audio. The Chat and Q&A functions will be turned off during the meeting. The Mayor will recognize you for 3 minutes of comment, and your microphone will be turned on.

4. Pursuant to §21.4(2) of the Code of Iowa (2019), the City has the right to amend this agenda up until 24 hours before the posted meeting time.

5. Hearing Assistance: If you are hearing impaired, Grimes will provide a sign language communicator on the internet Zoom meeting video presentation upon request. Please contact the Grimes City Clerk Rochelle Williams by email at rwilliams@grimesiowa.gov to request this service 24 hours in advance of the meeting.

For any additional assistance or questions in attending the meeting, please call 515-986-3036 Ext 1025 from 8 a.m. to 5 p.m., or contact the Grimes City Clerk Rochelle Williams by email at rwilliams@grimesiowa.gov.

Meetings will be recorded

AGENDA ITEMS FOR NOVEMBER 10, 2020 AT 5:30 PM AT GRIMES CITY HALL

1. Call to Order
   Pledge of Allegiance
2. Roll Call
3. Approval of the Agenda
4. Approval of the Consent Agenda **(Discussion is not allowed unless the Mayor or a City Council Member ask for an item to be removed and placed under Council actions for consideration)**
   A. Minutes from previous meeting
   B. O'Halloran International Plow Truck with Equipment from Hawkeye Truck - $213,118.00
   C. Wulfkuehle for lime removal from lagoon $98,265.00
   D. Professional Services:
      a. Amendment No. 2 to the Agreement for Engineering Services for Reverse Osmosis Water Treatment Plant – Phase 1 between McClure Engineering Company and the City of Grimes
   E. Pay Request for Professional Services:
      a. Pay Request #6 to Veenstra & Kimm, Inc for the Northwest Territory Lift Station and Forced Main Project $7,088.00
      b. Pay Request #23 to Veenstra & Kimm, Inc for WRA Connection $28,597.90
      c. Pay Request #3 to Veenstra & Kimm, Inc for the Connection Fee District Ordinances $620.00
      d. Pay Request #1 to Snyder & Associates, Inc for the 2020 Signal Network Communication ICAAP Application $6,000.00
      e. Pay Request #13 to Bolton & Menk, Inc for the SW County Line Road Improvements Construction Services $31,394.00
      f. Pay Request #10 to Bolton & Menk, Inc for the Highway 44 and SW County Line Road Intersection Improvements $1,022.50
      g. Pay Request #12 to Bolton & Menk, Inc for Hope Commercial Plat 1 Public Improvements Construction Services $16,380.00
      h. Allender Butzke Engineers Inc for Special Inspection Grimes Reverse Osmosis WTP $992.45

i. Whitfield and Eddy Law $23,222.50
j. Pay Request #1 to HR Green Inc for Pavement Management Study $5,950.50
k. Pay Request #8 to Civil Design Advantage for Concept Planning WRA Sanitary Sewer Connection $2,220.25

F. Pay Applications:
   a. Pay Application #11 to Shank Constructors, Inc for the Reverse Osmosis Water Treatment Plant – Phase 1 $1,080.758.00
   b. Pay Application #14 to CB&I for New 1.5 MG Elevated Water Storage Tank $100,493.61
G. Resolution 11-0320 Approving Payment of Retainage for Little Beaver & Prairie Creek Channel Improvements – Schildberg Construction $30,749.61 and First Bank of Lynnville $8,989.23
H. City of West Des Moines – Metro Home Improvement Program Annual City Contribution $27,969.00
I. Commercial Appraisers of Iowa, Inc for WRA Trunk Sewer Extension Project Appraisals -7 appraisals at $2,500/appraisal $17,500.00
J. Resolution 11-0520 Approving Consent and Agreement for Improvements Within Overland Flowage Easement for Brentwood Estates Lot 67 – 2912 NE Cherry Court
K. Resolution 11-0620 Approving Consent and Agreement for Improvements Within Overland Flowage Easement for Beaverbrooke West Plant Eight Lot 92 – 1704 NW Sunset Lane
L. Resolution 11-0820 Approving Consent and Agreement for Improvements Within Overland Flowage Easement for Heritage at Grimes Plat 6 Lot 3 – 2200 NE Little Beaver Drive
M. GWorks Annual License and Product Support Agreement Fee for SimpleCity Financial Accounting 01/01/2021 and ending 12/31/2021 $11,796.40
N. Resolution 11-0720 Accepting Public Improvements for Destination Ridge Plat 6
O. Resolution 11-0420 Service Contract to Clean the Grimes Community Complex by Reliable Maintenance Company
P. Claims Report

PUBLIC FORUM

"People wishing to address the Council need to sign up on the sheet which has been provided on the table near the door. Each person will be allowed three minutes from the podium and may address no more than two issues per Grimes Rules of Procedure for Conduct of City Business – May 2005."

PUBLIC AND COUNCIL AGENDA ITEMS

Council may consider and potentially act on the following Public Agenda items

A. Presentation: Greg Edwards President and CEO of Catch Des Moines
B. Northwest Territory Lift Station Connection Fee District Ordinance
   a. Public Hearing on the Northwest Territory Lift Station Connection Fee District
   b. First Reading of Ordinance 745 Northwest Territory Lift Station Connection Fee District
C. Northwest Territory Trunk Sewer Connection Fee District
   a. Public Hearing on the Northwest Territory Trunk Sewer Connection Fee District
   b. First Reading of Ordinance 746 Northwest Territory Trunk Sewer Connection Fee Districts
D. Urban Renewal Area
   a. Public Hearing on Proposed Amendment to the Grimes Urban Renewal Area
   b. Resolution 11-0120 to Approve Urban Renewal Plan Amendment for the Grimes Urban Renewal Area

c. Resolution 11-0220 Authorizing Internal Advance for Funding of Urban Renewal Administrative Support Program

COUNCIL DISCUSSIONS

1. Mayor's Report
2. City Staff's Report
3. Council Reports

ADJOURNMENT

CITY COUNCIL MEETING
Tuesday October 27, 2020

*Please note that this City Council Meeting was held as an electronic meeting pursuant to Iowa Code Section 21.8 due to the national health emergency that makes it impossible or impractical for an in-person meeting.

The regular meeting of the Grimes City Council was called to order by electronic meeting/Zoom on Tuesday October 27, 2020 at 5:32 P.M. Mayor Mikkelsen stated the meeting was being held electronically as provided under Iowa Code, Chapter 21.8 due to the national health emergency that makes it impossible or impractical for an in-person meeting. The Pledge of Allegiance was led by Mayor Mikkelsen.
Roll Call: Present: Mayor Scott Mikkelsen, David Gisch, Andrew Borcherding, Ryan Burger, Eric Johansen, Jill Altringer

AGENDA ITEMS

Approval of the Agenda
Mayor Mikkelsen asked for approval of the agenda.
Moved by Altringer, Second by Borcherding, to approve the agenda
Roll Call: Ayes: All. Nays: None. Motion passes: 5 to 0.

CONSENT AGENDA

A. Minutes from previous meeting b. Alcohol License Updates and Renewals: a. Casey's General Store #3746 1650 NE Beaverbrooke Blvd – Ownership Update b. Casey's General Store #2520 206 East 1st Street – Ownership Update c. Casey's General Store #3507 951 SE Gateway Drive – Ownership Update d. Kwik Star #1024 1450 Gateway Court – Class C Beer Permit (BC) e. Casey's General Store #3746 1650 NE Beaverbrook Blvd - Class E Liquor License f. Uptown Bar & Grill 201 South Main Street – Class C Liquor License g. Stevie C's 202-204 S Main Street – Class C Liquor License C. Municipal Supply Inc. water meters $22,362.50 D. Resolution 10-1320 Approving Consent and Agreement for Improvements Within Storm Sewer and Surface Water Flowage Easement for Beaverbrook West Plat 9 Lot 54 – 1400 NW Sunset Lane E. Resolution 10-1420 Approving Consent and Agreement for Improvements Within Storm Water Flowage Easement for Heritage Station Crossing Plat 1 Lot 51 – 1116 NE Cypress Circle F. Resolution 10-1520 Approving Consent and Agreement for Improvements Within Storm Sewer Easement for Autumn Park Plat 5 Lot 42 – 300 NW Beechwood Drive G. Resolution 10-1620 Approving Personnel Transaction H. Professional Services Agreements: a. Proposed Second Amendment to the Agreement between Veenstra & Kimm, Inc and the City of Grimes for the WRA Grimes Connector Amendment to Agreement Trunk Sewer Extension not to exceed $31,000 for the design, and not to exceed $35,000 for Construction Engineering Services b. Amended No. 1 to the Contract for Professional Engineering Services Concept Planning WRA Sanitary Sewer Connection Between City of Grimes and Civil Design Advantage I. Professional Services Payments: a. Allender Butzke Engineers Inc. for Special Inspections of Grimes RO Water Treatment Plant $1,664.85 b. Allender Butzke Engineers Inc for the Special Inspections of Grimes 1.5 MG Water Tank $403.15 J. Change Order: a. Change Order #5 to Grosch Irrigation Co Inc for the New Jordan Well increasing the contract $6,895.00 K. Pay Requests: a. Pay Request #2 to Redbud Landscaping, LLC for Native Vegetation Enhancements in Storm Water Treatment Facilities $2,188.33 L. City of Johnston Fire/EMS Reimbursement $25,434.58 M. Final for 19 inch Raw Water Main a. Resolution 10-1820 Accepting the Grimes 16 inch Raw Water Main with Progressive Structures b. Change Order #3 to Progressive

Structures for the Grimes 16 inch Raw Water Main decreasing the contract $51,198.52 c. Pay Request #8 to Progressive Structures for the Grimes 16 inch Raw Water Main $14,377.16 d. Engineer's Statement of Completion for the Grimes 16 inch Raw Water Main e. Pay Request #9 Retainage to Progressive Structures for the Grimes 16 inch Raw Water Main in the amount $58,760.58 (to be paid in 30 days) N. Resolution 10-1720 Authorizing the Mayor to Sign Contract with Feld Fire for New Custom Designed Wheeled Coach Ambulance for Johnston-Grimes Metropolitan Fire Department O. Grimes Chamber & Economic Development Reimbursement $12,622.50 P. Resolution 10-2120 Authorizing the City Clerk to Certify Said Charges to the Polk County Treasurer to be Assessed Against Real Estate and Premises Services, Which Charges are to be Collected and Returned in the Same Manner as other taxes Q. Claims Report $536,607.94
Moved by Altringer, Second by Borcherding, to approve the Consent Agenda.
Roll Call: Ayes: All. Nays: None. Motion passes: 5 to 0.

PUBLIC FORUM

"People wishing to address the Council need to sign up on the sheet which has been provided on the table near the door. Each person will be allowed three minutes from the podium and may address no more than two issues per Grimes Rules of Procedure for Conduct of City Business – May 2005."

PUBLIC AND COUNCIL AGENDA ITEMS

Council may consider and potentially act on the following Public Agenda items

A. Supervisor Bob Brownell Update

Polk County Supervisor Bob Brownell addressed the Council to provide a status update on Covid. He advised there is also a Polk County Eviction Mitigation Program, which works to help people affected by Covid to stay in their homes as long as possible. Brownell also noted that they are looking at the budget and impact on property and sales taxes for the County so far. Brownell said the long term projections should be tolerable, but Polk County, as well as all cities with strong economic ties to show and trade venues, will be seeing an impact on revenue. Council Member Gisch asked about data that might be available on companies that plan to have employees continue to work from home, and how that may impact the future of office space. Brownell noted that access and reliability of broad band was another related and important factor to consider as well.

B. Livestock Request Pursuant to City Ordinance 55.05 Submitted by Chris and Janet McAninch 340 SE 2nd Street Apt A

Development Services Director Alex Pfaltzgraff addressed the Council stating that the City had received a complaint about chickens being kept at 340 SE 2nd Street. He said upon investigation, it was found that 5 or 6 chickens were being kept at that residential site. Pfaltzgraff said that staff issued a letter informing the resident of the City Ordinance prohibiting livestock, and the resident provided a letter requesting a change to that Ordinance. Pfaltzgraff stated that Council has three options: 1. Deny the request. 2. Deny Request, and recommend modification of Ordinance, 3. Approve the request. Pfaltzgraff said staff recommends option 1.
Chris and Janet McAninch, 340 SE 2nd Street Apartment A, Travis Schall, 1105 SW 6th, addressed Council Via Zoom, Mindy Murphy, 3600 SE Glenstone # 804, and Brett Kessler of 701 SE 3rd Street, addressed Council Chat, and Bill Bohan, 700 SW Maplewood Dr also added comment via email.
Motion by Altringer, Second by Gisch, to select option 1, and deny the request.
Roll Call: Ayes: All. Nays: None. Motion passes: 5 to 0.

C. Establishment of Master Connection Fee Ordinance
Pfaltzgraff said establishing a Master Connection Fee Ordinance will be an effective tool to assist with financing public infrastructure projects that benefit development projects. Pfaltzgraff said these infrastructure projects have either been funded entirely by the City, or be the burden upon one individual developer in the past. Pfaltzgraff said due to the fact that these projects most commonly have benefits beyond a single property or development, staff is suggesting the creation of a Master Connection Fee Ordinance. He said this will allow for the City to create sub districts over certain parcels, which receive the benefit of an infrastructure project. Pfaltzgraff said this particular Master Ordinance will allow for connection fees for sanitary sewer, water and storm sewer projects. Pfaltzgraff stated that the City must have this Master Ordinance in place before any sub area connection fee districts are approved. He advised that the development of any sub area connection fee districts require public hearings and notices to the property owners impacted. Pfaltzgraff added that staff would recommend approval of the Ordinance, and if desired by Council, the remaining 2 readings may be waived.

a. **Public Hearing of the Master Connection Fee Ordinance**
Mayor Mikkelsen opened the Public Hearing at 6:18 p.m. being no public written or oral comment, the Public Hearing was closed at 6:18 p.m.

b. **First Reading of Ordinance 744 of the Master Connection Fee**
Motion by Gisch, Second by Altringer to approve the First Reading of Ordinance 744 of the Master Connection Fee.
Roll Call: Ayes: All. Nays: None. Motion passes 5 to 0

Motion by Gisch, Second by Altringer, to waive the second and third readings of Ordinance 744 of the Master Connection Fee.
Roll Call: Ayes: All. Nays: None. Motion passes 5 to 0

Motion by Gisch, Second by Altringer, to approve Final Passage of Ordinance 744 of the Master Connection Fee.
Roll Call: Ayes: All. Nays: None. Motion passes 5 to 0

D. Second Reading of Ordinance 740 Amending Provisions of the Zoning Ordinance of the City of Grimes, Iowa Regarding Parking
Pfaltzgraff stated this is a draft amendment to the parking and loading regulation within the Zoning Ordinance. He said over the past year it is evident the regulations were inconsistent with the more modern approach to development. Pfaltzgraff said there had not been any additional feedback since the first meeting, and that staff recommends approval.
Motion by Borcherding, Second by Johansen, to approve the second reading of Ordinance 740 amending provisions of the Zoning Ordinance of the City of Grimes Iowa regarding parking.
Roll Call: Ayes: All. Nays: None. Motion passes 5 to 0

Motion by Borcherding, Second by Johansen, to approve the third reading of Ordinance 740 amending provisions of the Zoning Ordinance of the City of Grimes Iowa regarding parking.
Roll Call: Ayes: All. Nays: None. Motion passes 5 to 0

Motion by Borcherding, Second by Johansen, to approve Final Passage of Ordinance 740 Amending Provisions of the Zoning Ordinance of the City of Grimes Iowa regarding Parking.
Roll Call: Ayes: All. Nays: None. Motion passes 5 to 0

E. Second Reading of Ordinance 742 Amending the Heritage at Grimes Planned Unit Development
Pfaltzgraff stated that there had not been any changes to Ordinance 742 since the Public Hearing. He said this Ordinance clarifies boundaries overall as well as square footages for the lots as well as clarifying fence and signage requirements.
Motion by Gisch, Second by Johansen to approve the second reading of Ordinance 742 Amending the Heritage at Grimes Planned Unit Development.
Roll Call: Ayes: All. Nays: None. Motion passes 5 to 0

Motion by Gisch, Second by Johansen to waive the third reading of Ordinance 742 Amending the Heritage at Grimes Plant Unity Development.
Roll Call: Ayes: All. Nays: None. Motion passes 5 to 0

Motion by Gisch, Second by Johansen to approve final passage of Ordinance 742 Amending the Heritage at Grimes Plant Unity Development.
Roll Call: Ayes: All. Nays: None. Motion passes 5 to 0

F. Second Reading of Ordinance 743 on Proposed Rezoning of Property Generally Located North of West 1st Street and West of Hwy 141 from A-1 Agricultural and R-4 Planned Unit Development to R-4 Planned Unit Development
Pfaltzgraff advised the Council there had not been any material changes or feedback since the Public Hearing. He said the applicant is requesting approval of a rezoning to the Planned Unit Development (PUD) which will allow for the construction of a mixed-use commercial and entertainment development west of HWY 141, south of Beaverbrooke Blvd and North of HWY 44. Pfaltzgraff stated that the development in total is approximately 170 acres in size and will provide for 3 distinct areas for development; commercial, mixed use, and single family.
Motion by Borcherding, Second by Johansen to approve second Reading of Ordinance 743 on proposed rezoning of property generally located north of West 1st Street and west of Hwy 141 from A-1 Agricultural and R-4 Planned Unit Development to R-4 Planned Unit Development
Roll Call: Ayes: All. Nays: None. Motion passes 5 to 0

Motion by Borcherding, Second by Johansen to waive the third Reading of Ordinance 743 on proposed rezoning of property generally located north of West 1st Street and west of Hwy 141 from A-1 Agricultural and R-4 Planned Unit Development to R-4 Planned Unit Development
Roll Call: Ayes: All. Nays: None. Motion passes 5 to 0

Motion by Borcherding, Second by Johansen to approve Final Passage of Ordinance 743 on proposed rezoning of property generally located north of West 1st Street and west of Hwy 141 from A-1 Agricultural and R-4 Planned Unit Development to R-4 Planned Unit Development
Roll Call: Ayes: All. Nays: None. Motion passes 5 to 0

G. **Resolution 10-2020 Management and Maintenance Agreement with Hope K Farms and Authorizing the Mayor to Execute**
Pfaltzgraff advised the Council that with the anticipated construction and future dedication of the Grimes Plex, contemplated with the Hope Commercial PUD, a Management and Maintenance Agreement has been prepared and reviewed by both parties. Pfaltzgraff said the agreement outlines that

the City shall be responsible for the maintenance aspects of the facility, as well as the management of certain calendars for tournament play. He said this is in part due to the Cities desire to ensure that the complex is well maintained prior to dedication. Pfaltzgraff advised that staff recommends approval. Mayor Mikkelsen noted he was very excited about this project and that this would be the largest turf/tournament venue for soccer and softball in the Midwest. Council Member Altringer asked if there had been legal review of the agreement. City Administrator Anderson said the City Attorney was the one that drafted this document. Council Member Johansen said Economic Development and the Administration had been researching methods to attract retail to the area, and this should be a great attraction to draw in sports tourism.
Motion by Johansen, Second by Altringer, to approve Resolution 10-2020 Management and Maintenance Agreement with Hope K Farms and Authorizing the Mayor to Execute.
Roll Call: Ayes: All. Nays: None. Motion passes 5 to 0

H**. Resolution 10-0620 Approving a Development Agreement with Hope K Farms LLC, Authorizing Annual Appropriation Tax Increment Payments and Pledging Certain Tax Increment Revenues to the Payment of the Agreement**
City Administrator Jake Anderson told the Council that the Development Agreement outlines the Developer shall be required to construct a multi-sport turf athletic complex and the infrastructure within the Hope Commercial Entertainment District. Anderson advised that this agreement gives the City access to the fields during week days beginning 2026. He added that no later than 2031, the developer has agreed to dedicate the complex to the City. Anderson said in recognition of this, the City has agreed to distribute economic development payments to the Developer, not to exceed $25,000,000. He said these payments would be made over a period of time, not to exceed 15 years, from incremental property taxes being generated off the surrounding development. Anderson said staff recommends approval. Mayor Mikkelsen acknowledged the many pieces that had to come together, and the flexibility of the Developer, Grimes Chamber, and City staff, to get a project of this scope to become a reality represents a huge achievement for the City.
Motion by Johansen, Second by Borcherding, to approve Resolution 10-0620 approving a Development Agreement with Hope K Farms LLC, Authorizing Annual Appropriation Tax Increment Payments and Pledging Certain Tax Increment Revenues to the Payment of the Agreement.
Roll Call: Ayes: All. Nays: None. Motion passes 5 to 0

I. **Third Reading of Ordinance 738 rezoning 40.06 acres from A-1 Agricultural to R-1 Single Family known as Willow Hills, LLC**
Pfaltzgraff reported to the Council that the 80/20 Annexation had been approved by the City Development Board, which provided many favorable comments about the project. Pfaltzgraff said now this area is officially within the City limits so rezoning could move forward. Pfaltzgraff said there had not been any changes from the previous two readings. He said this project would have 86 single family lots and feature a public fishing pond surrounded by a trail, in the North West portion of the development. Council Member Gisch asked if an alternative to having the cul-de-sac in the plat had been reviewed. Pfaltzgraff said they looked into adjusting the plan with the developer, but it because of the way the land falls, and to ensure the appropriate size of the storm water management pond, it would not be a good to change the current plat.
Motion by Gisch, Second by Johansen, to approve the Third Reading of Ordinance 738 Rezoning 40.06 acres from A-1 Agricultural to R-1 Single Family known as Willow Hills, LLC
Roll Call: Ayes: All. Nays: None. Motion passes 5 to 0

Motion by Gisch, Second by Johansen, to approve Final Passage of Ordinance 738 Rezoning 40.06 acres from A-1 Agricultural to R-1 Single Family known as Willow Hills, LLC
Roll Call: Ayes: All. Nays: None. Motion passes 5 to 0

J. Willow Hills Preliminary Plat
Pfaltzgraff said the single family lots in this plat range from 0.27 to 0.60 acres in size, and an outlot for parkland dedication totals 3.54 acres. The parkland will include a pond for fishing and have a recreational trail. Pfaltzgraff said a right-of-way dedication is necessary for NW 27th Street to provide 60' from centerline to allow for future improvement of NW 27th Street. Pfaltzgraff said the first lots could be available spring of 2021 and that staff would recommend approval of the Preliminary Plat for Willow Hills, subject to any remaining staff comments. Council Member Altringer asked about access for the public fishing. Pfaltzgraff stated that the pond and access signage would be done when the second phase was developed.
Motion by Gisch, Second by Johansen to approve the Willow Hills Preliminary Plat subject to the staff letter dated August 21st, 2020.
Roll Call: Ayes: All. Nays: None. Motion passes 5 to 0

K. Heritage at Grimes Commercial Plat 3 Preliminary Plat
Pfaltzgraff stated this development was located at the southeast corner of NE Gateway Drive and NE 10th Street and was zoned R-4 Heritage PUD. Pfaltzgraff said the applicant is requesting approval for future subdivision of the existing lots 9 and 10 at Grimes Commercial Plat 3 into two development lots of a different configuration. He said it is the intent to build a dentist office on lot one. He added that staff would recommend approval of the Preliminary Plat for Heritage at Grimes Commercial Plat 3 subject to any remaining staff comments.
Motion by Johansen, Second by Burger to approve Heritage at Grimes Commercial Preliminary Plat.
Roll Call: Ayes: All. Nays: None. Motion passes 5 to 0

L. Grimes Dental Group Site Plan
Pfaltzgraff said the applicant is requesting approval of the site plan for a 3,346 square foot dental office located at 951 NE Gateway Drive. Pfaltzgraff said the current Grimes Dental Group located on SE Main Street is planning to relocate to this site. He advised that the property is located within the C-2 zoning district and is within the Heritage PUD. Pfaltzgraff told the Council that the façade is proposed to be principally constructed of stone and fiber cement panels and the elevations appear to meet all minimum architectural standards within the Heritage PUD. He said the site will be accessed from NE Gateway Drive and NE 10th Street. Pfaltzgraff said lighting will be provided on the building faces and no pole lights are planned at this time.
Motion by Gisch, Second by Johansen to approve the Grimes Dental Group Site Plan.
Roll Call: Ayes: All. Nays: None. Motion passes 5 to 0

M. Destination Market Plat 5 Preliminary Plat
Pfaltzgraff said this applicant is requesting approval of a preliminary plat which will allow for the future subdivision of the property. He said this will provide for two development lots at the northwest corner of E 1 Street and NE Destination Drive. Pfaltzgraff stated that it is the intent to build a coffee shop at this location. Mayor Mikkelsen asked for more information about the developer for this project. Pfaltzgraff said it is Cushman and Wakefield, along with Mark Hanrahan, who have brought a number of quality projects to Grimes, such as Menards, Kwik Star, as well as couple of retail sites in progress. Mayor Mikkelsen said it looks like an exciting project and appreciates seeing these services being brought to Grimes to fill the need of the community for more retail and restaurant and service

opportunities. Council Member Gisch asked if the right in/right out access feature would cause any stacking issues. City Engineer Ahrens said by installing an actual additional lane, the traffic flow would be better than without it.
Motion by Johansen, Second by Altringer, to approve Destination Market Plat 5 Preliminary Plat subject to any staff comments.
Roll Call: Ayes: All. Nays: None. Motion passes 5 to 0

N. Destination Market Plat 5, Lot 1 Site Plan
Pfaltzgraff said the applicant is requesting approval for a 2,233 square foot coffee shop with a drive thru lane and outdoor patio located at 2255 E. 1st Street. He explained that this is the site plan for the proposed coffee shop at the location that was just approved on lot one at the northwest corner of E. 1st Street and NE Destination Drive. Pfaltzgraff said this will be principally constructed of brick and fiber cement panels with wood finish. Council Member Gisch asked if they could disclose the proposed tenant. Mark Hanrahan, of Cushman & Wakefield, addressed the Council stating they were not able to do so at this time, but appreciated working with the City staff to bring this project forward.
Motion by Gisch, Second by Johansen, to approve Destination Market Plat 5, Lot 1 Site plan subject to staff comments.
Roll Call: Ayes: All. Nays: None. Motion passes 5 to 0

O. Resolution 10-1920 Approving a Letter Agreement with Metro Fibernet, LLC Regarding Construction of a Fiber-To-The-Premises Network in Grimes
Anderson addressed the Council stating this resolution would allow Metro Fibernet to run fiber throughout the area in the City right-of- way over the next two years. Anderson noted that as the City would be responsible for underground locates for this project and that the cost would need to be budgeted for. Council Member Johansen said he has heard resident comments pertaining to the lack of high speed providers in the area and feels this would be a great option to add for high speed internet service for the community. Johansen said this would be particularly timely with the number of people working from home.
Motion by Johansen, Second by Gisch to approve Resolution 10-1920 Approving a Letter Agreement with Metro Fibernet, LLC Regarding Construction of a Fiber-To-The-Premises Network in Grimes.
Roll Call: Ayes: All. Nays: None. Motion passes 5 to 0

PUBLIC FORUM – None

1. **Mayor's Report**- None

2. City Staff's Report –
City Administrator Anderson commented that he was looking forward to the Grimes Plex Project getting started and appreciated everyone's efforts in making it happen. Anderson said he is anticipating resuming hybrid Council meetings at the Grimes Community Complex at the next meeting in November. Anderson also acknowledged the efforts of IT Coordinator Jeff Macke for upgrading the internet services at the Community Complex to help with being able to provide a hybrid meeting. Anderson also provided an update on the grant from BRAVO for an arts master plan. Anderson said the consultant hired for that endeavor is requesting short meetings with each Council member to gather input and direction.

3. **Council Reports-**

Council Member Gisch said Metro Waste has had a materials drop off program operating over the weekends since spring, in addition to city clean-ups in spring and fall. Gisch said that program was to conclude shortly for the season. Gisch said the program would be evaluated and possibly restarted next spring.

ADJOURN

Motion by Altringer, Second by Borcherding to adjourn the meeting at 7:33 pm.
Roll Call: Ayes: All, Nays: None Motion passes 5 to 0

ATTEST:

_____ _____

Rochelle Williams, City Clerk Scott Mikkelsen, Mayor

CITY OF GRIMES

101 NE Harvey, Grimes, Iowa 50111
515.986.3036 Fax 515.986.3846

AGENDA MEMO

Item No. X
For Meeting of 11/10/2020

AGENDA HEADING: New Snow Plow Truck Purchase

SYNOPSIS: The Streets Department budgeted for the purchase of a new snow plow truck for FY21 through the CIP process. The new plow truck will allow Public Works to keep up with increased service level requirements due to projects such as SW County Line Rd. and NE Gateway Dr. road improvements. The new vehicle will also allow for safer and more efficient snow removal operations through increased safety options and material monitoring equipment.

FISCAL IMPACT: Utilizing the Sourcewell pricing, the cost of the snow plow truck is $213,118.00 from O'Halloran International with equipment added by Hawkeye Truck Equipment.

PREVIOUS COUNCIL ACTION(S): This specific equipment purchase was included in the approved FY21 CIP in the amount of $280,000.00.

BOARD/COMMISSION ACTION(S):

STAFF/COMMITTEE RECOMMENDATION: Staff recommends the purchase the snow plow truck from O'Halloran International and Hawkeye Truck Equipment for a total cost of $213,118.00.

HV507 SFA

Sales Proposal For:

City of Grimes Plow Truck with Front Wing

Presented By:

O'HALLORAN INTERNATIONAL

Prepared For:
City of Grimes Plow Truck with Front Wing
Jeremy Thayer
900 N. Main
Grimes, IA 50111-
(515)986 - 9636

Presented By:
O'HALLORAN INTERNATIONAL
Bob Kayser
3311 ADVENTURELAND DRIVE
ALTOONA IA 50009 -
(515)967-3300

THE FOLLOWING PRICING IS BASED OFF OF THE NATIONAL SOURCEWELL/NJPA CONTRACT THAT IS HELD BY INTERNATIONAL AND HAS BEEN USED BY THE IOWA DOT TO PURCHASE THEIR PLOW TRUCKS FOR THE PAST THREE YEARS NOW. ORDER NUST BE PLACED NO LATER THEN 04/15/21.

$ 94,859.00 2022 Model Year International HV507 300 Horsepower with Allison automatic transmission.
$ 118,295.00 Equipment from Hawkeye Truck Equipment #23090

$ 213,118.00 TOTAL PRICE WITH ALL EQUIPMENT

NOTE: Includes 5 Year 100,000 Miles extended warranty on the engine & aftertreatment system.

CITY OF GRIMES

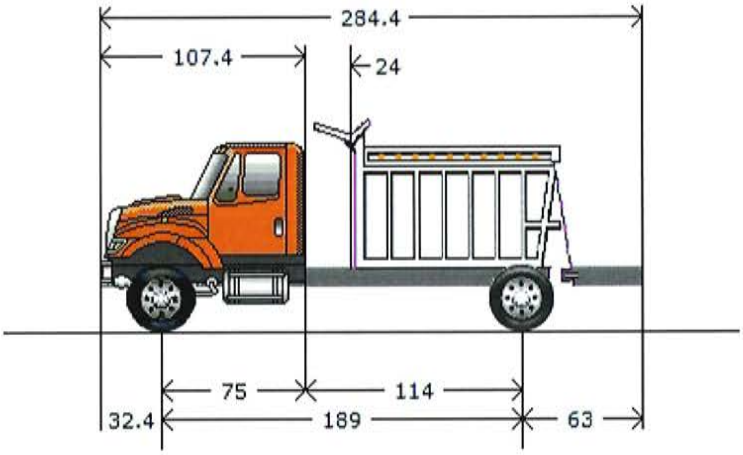

Model Profile
2022 HV507 SFA (HV507)

AXLE CONFIG:	4X2
MISSION:	Requested GVWR: 35000. Calc. GVWR: 39000 Calc. Geared Speed: 73.5 MPH
DIMENSION:	Wheelbase: 189.00, CA: 114.00, Axle to Frame: 63.00
ENGINE, DIESEL:	{Cummins L9 300} EPA 2017, 300HP @ 2000 RPM, 860 lb-ft Torque @ 1300 RPM, 2200 RPM Governed Speed, 300 Peak HP (Max)
TRANSMISSION, AUTOMATIC:	{Allison 3500 RDS} 5th Generation Controls, Wide Ratio, 6-Speed with Double Overdrive, with PTO Provision, Less Retarder, Includes Oil Level Sensor, with 80,000-lb GVW and GCW Max, On/Off Highway
CLUTCH:	Omit Item (Clutch & Control)
AXLE, FRONT NON-DRIVING:	{Meritor MFS-16-143A} Wide Track, I-Beam Type, 16,000-lb Capacity
AXLE, REAR, SINGLE:	{Meritor RS-23-161} Single Reduction, 23,000-lb Capacity, 200 Wheel Ends Gear Ratio: 5.63
CAB:	Conventional, Day Cab
TIRE, FRONT:	(2) 315/80R22.5 Load Range L HAU 3 WT (CONTINENTAL), 480 rev/mile, 68 MPH, All-Position
TIRE, REAR:	(4) 11R22.5 Load Range G HDR2 (CONTINENTAL), 491 rev/mile, 75 MPH, Drive
SUSPENSION, REAR, SINGLE:	31,000-lb Capacity, Vari-Rate Springs, with 4500-lb Capacity Auxiliary Multileaf Springs
PAINT:	Cab schematic 100WK

Location 1: 0311, Omaha Orange (Std)
Chassis schematic N/A

Code	Description
HV50700	Base Chassis, Model HV507 SFA with 189.00 Wheelbase, 114.00 CA, and 63.00 Axle to Frame.
1570	TOW HOOK, FRONT (2) Frame Mounted
1ANA	AXLE CONFIGURATION {Navistar} 4x2
	Notes : Pricing may change if axle configuration is changed.
1CAG	FRAME RAILS Heat Treated Alloy Steel (120,000 PSI Yield); 10.250" x 3.610" x 0.375" (260.4mm x 91.7mm x 9.5mm); 456.0" (11582mm) Maximum OAL
1LLA	BUMPER, FRONT Swept Back, Steel, Heavy Duty
1WDS	FRAME EXTENSION, FRONT Integral; 20" In Front of Grille
1WEV	WHEELBASE RANGE 146" (370cm) Through and Including 195" (495cm)
2ARU	AXLE, FRONT NON-DRIVING {Meritor MFS-16-143A} Wide Track, I-Beam Type, 16,000-lb Capacity
3ACP	SUSPENSION, FRONT, SPRING Multileaf, Shackle Type, 16,000-lb Capacity, Less Shock Absorbers
3WAJ	SPRINGS, FRONT AUXILIARY Air Bag, Right Side Only, Driver Control
4091	BRAKE SYSTEM, AIR Dual System for Straight Truck Applications
	Includes : BRAKE LINES Color and Size Coded Nylon : DRAIN VALVE Twist-Type : GAUGE, AIR PRESSURE (2) Air 1 and Air 2 Gauges; Located in Instrument Cluster : PARKING BRAKE CONTROL Yellow Knob, Located on Instrument Panel : PARKING BRAKE VALVE For Truck : QUICK RELEASE VALVE On Rear Axle for Spring Brake Release: 1 for 4x2, 2 for 6x4 : SPRING BRAKE MODULATOR VALVE R-7 for 4x2, SR-7 with relay valve for 6x4/8x6
4619	TRAILER CONNECTIONS Four-Wheel, with Hand Control Valve and Tractor Protection Valve, for Straight Truck
	Notes : When electronic stability control is ordered with trailer connections on a 4x2 truck, please check the operator manual for trailer weight restrictions.
4732	DRAIN VALVE {Berg} with Pull Chain, for Air Tank
4AZJ	AIR BRAKE ABS {Bendix AntiLock Brake System} 4-Channel (4 Sensor/4 Modulator) Full Vehicle Wheel Control System, with Automatic Traction Control
4EBD	AIR DRYER {Wabco System Saver 1200} with Heater
4EVH	BRAKE CHAMBERS, REAR AXLE {MGM TR3030LP3TSHD} 30/30 SqIn Spring Brake
4EXV	BRAKE CHAMBERS, FRONT AXLE {Bendix} 24 SqIn
4LAG	SLACK ADJUSTERS, FRONT {Gunite} Automatic
4LGG	SLACK ADJUSTERS, REAR {Gunite} Automatic
4SPA	AIR COMPRESSOR {Cummins} 18.7 CFM
4VGN	AIR TANK Painted Aluminum, with Straight Thread O-Ring Ports
4VKC	AIR DRYER LOCATION Mounted Inside Left Rail, Back of Cab

Code	Description
4VKJ	AIR TANK LOCATION (2) Mounted Under Battery Box, Outside Left Rail, Back of Cab, Perpendicular to Rail
4WBX	DUST SHIELDS, FRONT BRAKE for Air Cam Brakes
4WDM	DUST SHIELDS, REAR BRAKE for Air Cam Brakes
4XDL	BRAKES, FRONT {Bendix Spicer ES-165-6X} Air S-Cam Type, Heavy Duty Fabricated Spider, Fabricated Shoe, Single Anchor Pin, Size 16.5" X 6", 23,000-lb Capacity
4XDM	BRAKES, REAR {Bendix Spicer ES-165-7X} Air S-Cam Type, Heavy Duty Fabricated Spider, Fabricated Shoe, Single Anchor Pin, Size 16.5" X 7", 23,000-lb Capacity per Axle
5710	STEERING COLUMN Tilting and Telescoping
5CAW	STEERING WHEEL 4-Spoke; 18" Dia., Black
5PTB	STEERING GEAR (2) {Sheppard M100/M80} Dual Power
6DGB	DRIVELINE SYSTEM {Dana Spicer} SPL140, for 4x2/6x2
7BEV	AFTERTREATMENT COVER Steel, Black
7BKS	EXHAUST SYSTEM Single, Horizontal Aftertreatment Device, Frame Mounted Right Side Under Cab, for Single Vertical Tail Pipe, Frame Mounted Right Side Back of Cab
7WAZ	TAIL PIPE (1) Turnback Type
7WBS	MUFFLER/TAIL PIPE GUARD (1) Bright Stainless Steel
7WCM	EXHAUST HEIGHT 8' 10"
8000	ELECTRICAL SYSTEM 12-Volt, Standard Equipment Includes : DATA LINK CONNECTOR For Vehicle Programming and Diagnostics In Cab : HAZARD SWITCH Push On/Push Off, Located on Instrument Panel to Right of Steering Wheel : HEADLIGHT DIMMER SWITCH Integral with Turn Signal Lever : PARKING LIGHT Integral with Front Turn Signal and Rear Tail Light : STARTER SWITCH Electric, Key Operated : STOP, TURN, TAIL & B/U LIGHTS Dual, Rear, Combination with Reflector : TURN SIGNAL SWITCH Self-Cancelling for Trucks, Manual Cancelling for Tractors, with Lane Change Feature : WINDSHIELD WIPER SWITCH 2-Speed with Wash and Intermittent Feature (5 Pre-Set Delays), Integral with Turn Signal Lever : WINDSHIELD WIPERS Single Motor, Electric, Cowl Mounted : WIRING, CHASSIS Color Coded and Continuously Numbered
8518	CIGAR LIGHTER Includes Ash Cup
8541	HORN, ELECTRIC (2) Disc Style
8GGG	ALTERNATOR {Delco Remy 36SI} Brushless, 12 Volt, 165 Amp Capacity, Pad Mount, with Remote Sense
8HAB	BODY BUILDER WIRING Back of Day Cab at Left Frame or Under Sleeper, Extended or Crew Cab at Left Frame; Includes Sealed Connectors for Tail/Amber Turn/Marker/ Backup/Accessory Power/ Ground and Sealed Connector for Stop/Turn
8MSG	BATTERY SYSTEM {Fleetrite} Maintenance-Free, (3) 12-Volt 1980CCA Total, Top Threaded Stud
8RGA	2-WAY RADIO Wiring Effects; Wiring with 20 Amp Fuse Protection, Includes Ignition Wire with 5 Amp Fuse, Wire Ends Heat Shrink and Routed to Center of Header Console in Cab

Code	Description
8RMH	BATTERY DISCONNECT SWITCH {Cole-Hersee 75920-06} 300 Amp, Disconnects Charging Circuits, Locks with Padlock, Battery Box Mounted
8RMZ	SPEAKERS (2) 6.5" Dual Cone Mounted in Both Doors, (2) 5.25" Dual Cone Mounted in Both B-Pillars
8RPB	RADIO, AUXILIARY CONTROLS Mounted in Steering Wheel, Radio Function Control Switch, Includes Volume Up/Down, Mute, Forward/Back and Bluetooth Answer/Disconnect
8RPT	RADIO AM/FM/WB/Clock/USB Input/Auxiliary Input
8THJ	AUXILIARY HARNESS 3.0' for Auxiliary Front Head Lights and Turn Signals for Front Plow Applications
8TKB	STOP, TURN, TAIL & B/U LIGHTS {Truck Lite} Super 44, with LED Lights for Stop, Turn & Tail Lights, Truck Lite Super 40 for Backup Lights, with Power Module, "International" Termination and Less Junction Box, Includes Incandescent License Plate Light
8TMG	TRAILER CONNECTION SOCKET {Phillips} 7-Way, Mounted at Rear of Frame, Wired for Turn Signals Combined with Stop, Compatible with Trailers with Combined Stop, Tail, Turn Lamps
8TNR	BATTERY CABLES with 36" of Extra Length Coiled and Strapped Near Battery Box
8VUL	BATTERY BOX Steel, with Plastic Cover, 18" Wide, 2-4 Battery Capacity, Mounted Left Side Back of Cab
8WGL	WINDSHIELD WIPER SPD CONTROL Force Wipers to Slowest Intermittent Speed When Park Brake Set and Wipers Left on for a Predetermined Time
8WGU	BATTERY BOX COVER Aluminum
8WPH	CLEARANCE/MARKER LIGHTS (5) {Truck Lite} Amber LED Lights, Flush Mounted on Cab or Sunshade
8WPZ	TEST EXTERIOR LIGHTS Pre-Trip Inspection will Cycle all Exterior Lamps Except Back-up Lights
8WRB	HEADLIGHTS ON W/WIPERS Headlights Will Automatically Turn on if Windshield Wipers are turned on
8WTP	COURTESY LIGHT (2) Mounted In Front Map Pocket Left and Right Side
8WWJ	INDICATOR, LOW COOLANT LEVEL with Audible Alarm
8WXD	ALARM, PARKING BRAKE Electric Horn Sounds in Repetitive Manner When Vehicle Park Brake is "NOT" Set, with Ignition "OFF" and any Door Opened
8WXG	STARTING MOTOR {Mitsubishi Electric Automotive America 105P} 12-Volt, with Soft-Start
8XAH	CIRCUIT BREAKERS Manual-Reset (Main Panel) SAE Type III with Trip Indicators, Replaces All Fuses
8XGT	TURN SIGNALS, FRONT Includes LED Side Turn Lights Mounted on Fender
8XHN	HORN, AIR Single Trumpet, Black, with Lanyard Pull Cord
8XKZ	USB PORT (2) Located in the Instrument Panel
9AAB	LOGOS EXTERIOR Model Badges
9AAE	LOGOS EXTERIOR, ENGINE Badges
9HAN	INSULATION, UNDER HOOD for Sound Abatement
9HBM	GRILLE Stationary, Chrome
9HBN	INSULATION, SPLASH PANELS for Sound Abatement

Code	Description
9WBC	FRONT END Tilting, Fiberglass, with Three Piece Construction, for WorkStar/HV
10021	CHASSIS COATING Corrosion Resistant E-Coat Primer Coating for Single Frame Rails
10060	PAINT SCHEMATIC, PT-1 Single Color, Design 100
	Includes : PAINT SCHEMATIC ID LETTERS "WK"
10761	PAINT TYPE Base Coat/Clear Coat, 1-2 Tone
10JPA	CUSTOMER IDENTITY for National Joint Powers Alliance
10SLV	PROMOTIONAL PACKAGE Government Silver Package
11001	CLUTCH Omit Item (Clutch & Control)
12703	ANTI-FREEZE Red, Extended Life Coolant; To -40 Degrees F/ -40 Degrees C, Freeze Protection
12849	BLOCK HEATER, ENGINE 120V/1000W, for Cummins ISB/B6.7/ISL/L9 Engines
	Includes : BLOCK HEATER SOCKET Receptacle Type; Mounted below Drivers Door
12851	PTO EFFECTS, ENGINE FRONT Less PTO Unit, Includes Adapter Plate on Engine Front Mounted
12EHU	ENGINE, DIESEL {Cummins L9 300} EPA 2017, 300HP @ 2000 RPM, 860 lb-ft Torque @ 1300 RPM, 2200 RPM Governed Speed, 300 Peak HP (Max)
12THT	FAN DRIVE {Horton Drivemaster} Two-Speed Type, Direct Drive, with Residual Torque Device for Disengaged Fan Speed
	Includes : FAN Nylon
12UWZ	RADIATOR Aluminum, Cross Flow, Front to Back System, 1228 SqIn, with 1167 SqIn Charge Air Cooler, Includes In-Tank Oil Cooler
	Includes : DEAERATION SYSTEM with Surge Tank : HOSE CLAMPS, RADIATOR HOSES Gates Shrink Band Type; Thermoplastic Coolant Hose Clamps : RADIATOR HOSES Premium, Rubber
12VAL	AIR CLEANER Dual Element, with Integral Snow Valve and In-Cab Control
12VHJ	FEDERAL EMISSIONS {Cummins L9} EPA, OBD and GHG Certified for Calendar Year 2020
12VXT	THROTTLE, HAND CONTROL Engine Speed Control; Electronic, Stationary, Variable Speed; Mounted on Steering Wheel
12VYL	ACCESSORY WIRING, SPECIAL for Road Speed Wire Coiled Under Instrument Panel for Customer Use
12VYP	ENGINE CONTROL, REMOTE MOUNTED No Provision for Remote Mounted Engine Control
12WZE	EMISSION COMPLIANCE Federal, Does Not Comply with California Clean Air Idle Regulations
13AVL	TRANSMISSION, AUTOMATIC {Allison 3500 RDS} 5th Generation Controls, Wide Ratio, 6-Speed with Double Overdrive, with PTO Provision, Less Retarder, Includes Oil Level Sensor, with 80,000-lb GVW and GCW Max, On/Off Highway
13WDZ	SHIFT CONTROL PARAMETERS {Allison} 3000 or 4000 Series Transmissions, S1 Performance in Primary and Fixed Programming in Secondary

Code	Description
13WET	TRANSMISSION SHIFT CONTROL Column Mounted Stalk Shifter, Not for Use with Allison 1000 & 2000 Series Transmission
13WLP	TRANSMISSION OIL Synthetic; 29 thru 42 Pints
13WUC	ALLISON SPARE INPUT/OUTPUT for Rugged Duty Series (RDS) and Regional Haul Series (RHS), General Purpose Trucks, Construction, Package Number 223
13WVW	NEUTRAL AT STOP OMIT
13WYH	TRANSMISSION TCM LOCATION Located Inside Cab
13XAM	PTO LOCATION Dual, Customer Intends to Install PTO at Left and/or Right Side of Transmission
14ASK	AXLE, REAR, SINGLE {Meritor RS-23-161} Single Reduction, 23,000-lb Capacity, 200 Wheel Ends . Gear Ratio: 5.63
14SAL	SUSPENSION, REAR, SINGLE 31,000-lb Capacity, Vari-Rate Springs, with 4500-lb Capacity Auxiliary Multileaf Springs
15924	FUEL TANK STRAPS Bright Finish Stainless Steel
15LLZ	LOCATION FUEL/WATER SEPARATOR Mounted Outside Left Rail, 41" Back of Cab
15LMR	FUEL/WATER SEPARATOR {Racor 400 Series,} with Primer Pump, Includes Water-in-Fuel Sensor
15SGJ	FUEL TANK Top Draw, Non-Polished Aluminum, D-Style, 16" Tank Depth, 50 US Gal (189L), Mounted Left Side, Under Cab
15WDG	DEF TANK 7 US Gal (26L) Capacity, Frame Mounted Outside Left Rail, Under Cab
16030	CAB Conventional, Day Cab
16BAM	AIR CONDITIONER with Integral Heater and Defroster
16GDG	GAUGE CLUSTER Premium Level; English with English Speedometer and Tachometer, for Air Brake Chassis, Includes Engine Coolant Temperature, Primary and Secondary Air Pressure, Fuel and DEF Gauges, Oil Pressure Gauge, Includes 5 Inch LCD Color Display
16HGH	GAUGE, OIL TEMP, AUTO TRANS for Allison Transmission
16HKT	IP CLUSTER DISPLAY On Board Diagnostics Display of Fault Codes in Gauge Cluster
16JNT	SEAT, DRIVER {National 2000} Air Suspension, High Back with Integral Headrest, Vinyl, Isolator, 1 Chamber Lumbar, with 2 Position Front Cushion Adjust, -3 to +14 Degree Angle Back Adjust
16SJX	MIRROR, CONVEX, HOOD MOUNTED {Lang Mekra} (2) Right and Left Sides, Bright, Heated, 7.5" Sq.
16SMN	SEAT, PASSENGER {National} Non Suspension, High Back, Fixed Back, Integral Headrest, Vinyl
16SNV	MIRRORS (2) Aero Pedestal, Power Adjust, Heated, Turn Signals, Bright Heads, Black Arms, 6.5" x 14" Flat Glass, Includes 6.5" x 6" Convex Mirrors, for 102" Load Width
	Notes : Mirror Dimensions are Rounded to the Nearest 0.5"
16VKB	CAB INTERIOR TRIM Classic, for Day Cab
	Includes : CONSOLE, OVERHEAD Molded Plastic with Dual Storage Pockets, Retainer Nets and CB Radio Pocket; Located Above Driver and Passenger : DOME LIGHT, CAB Door Activated and Push On-Off at Light Lens, Timed Theater Dimming, Integral to Overhead Console, Center Mounted

Code	Description
	: SUN VISOR (2) Padded Vinyl; 2 Moveable (Front-to-Side) Primary Visors, Driver Side with Toll Ticket Strap
16VSL	WINDSHIELD Heated, Single Piece
16WBY	ARM REST, RIGHT, DRIVER SEAT
16WJU	WINDOW, POWER (2) and Power Door Locks, Left and Right Doors, Includes Express Down Feature
16WLS	FRESH AIR FILTER Attached to Air Intake Cover on Cowl Tray in Front of Windshield Under Hood
16WSK	CAB REAR SUSPENSION Air Bag Type
16XJP	INSTRUMENT PANEL Wing Panel
16XWJ	WINDSHIELD WIPER BLADES Snow Type
16XXC	COWL TRAY LID
16ZJA	ACCESS, CAB Aluminum, Self-Cleaning, Open and Serrated Design, Driver & Passenger Sides, Two Steps per Door, for use with Day Cab, Extended Cab or Sleeper Cab
27DPN	WHEELS, FRONT {Accuride 29039} DISC; 22.5x9.00 Rims, Powder Coat Steel, 5-Hand Hole, 10-Stud, 285.75mm BC, Hub-Piloted, Flanged Nut, with Steel Hubs, Non-Standard Offset, with .5" Thick Disc
28DUK	WHEELS, REAR {Accuride 29169} DUAL DISC; 22.5x8.25 Rims, Powder Coat Steel, 5-Hand Hole, 10-Stud, 285.75mm BC, Hub-Piloted, Flanged Nut, with .472" Thick Increased Capacity Disc and Steel Hubs
29WAP	WHEEL GUARDS, FRONT {Accuride} for Metric Hub Piloted Wheels with Flanged Mounting Nuts Mounted Between Hub and Wheel
29WAR	WHEEL GUARDS, REAR {Accuride} for Metric Hub Piloted Wheels with Flanged Mounting Nuts, Mounted Between Hub & Wheel and Between Dual Wheels
29WLK	WHEEL BEARING, FRONT, LUBE {EmGard FE-75W-90} Synthetic Oil
60AAG	BDY INTG, REMOTE POWER MODULE Mounted Inside Cab Behind Driver Seat, Up to 6 Outputs & 6 Inputs, Max 20 amp per Channel, Max 80 amp Total; Includes 1 Switch Pack with Latched Switches
7372135423	(4) TIRE, REAR 11R22.5 Load Range G HDR2 (CONTINENTAL), 491 rev/mile, 75 MPH, Drive
7792545437	(2) TIRE, FRONT 315/80R22.5 Load Range L HAU 3 WT (CONTINENTAL), 480 rev/mile, 68 MPH, All-Position
	Cab schematic 100WK
	Location 1: 0311, Omaha Orange (Std)
	Chassis schematic N/A
	Services Section:
40128	WARRANTY Standard for HV507, HV50B, HV607 Models, Effective with Vehicles Built July 1, 2017 or Later, CTS-2025A
40SZD	SRV CONTRACT, EXT CMS ENG/AFTR {Cummins} To 60-Month/100,000 Miles (160,000 km), Extended Cummins L9 Engine Coverage, Protection Plan 1 and Aftertreatment
PD-51	Momentary Switch; Install one Momentary Switch in the remote switch package to operate the dump body vibrator.

Code	Description
LED Headlamps	Install LED headlamps

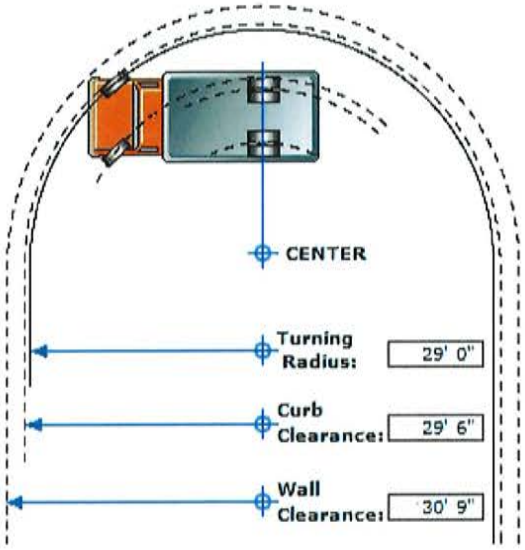

Series:	HV
Model:	HV507
Description:	HV507 SFA
Model Year:	2022

Calculation Factors

Wheelbase:	189
Front Axle:	0002ARU
Description:	AXLE, FRONT NON-DRIVING, {Meritor MFS-16-143A} Wide Track, I-Beam Type, 16,000-lb Capacity
Front Wheel:	0027DPN
Description:	WHEELS, FRONT, {Accuride 29039} DISC; 22.5x9.00 Rims, Powder Coat Steel, 5-Hand Hole, 10-Stud, 285.75mm BC, Hub-Piloted, Flanged Nut, with Steel Hubs, Non-Standard Offset, with .5" Thick Disc
Front Tire:	07792545437
Description:	TIRES, 315/80R22.5 Load Range L HAU 3 WT (CONTINENTAL), 480 rev/mile, 68 MPH, All-Position
Steering Gear:	0005PTB
Description:	STEERING GEAR, (2) {Sheppard M100/M80} Dual Power

Turning Radius Statistics

General Information

Inside Turn Angle:	43 Degrees
Radial Overhang:	21

Axle Information

KingPin Inclination:	6.25 Degrees
KingPin Center:	71.5

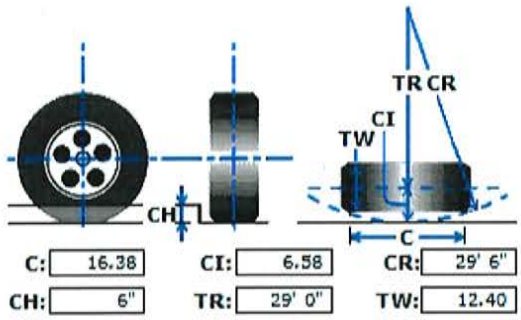

Turning Radius - Curb View

C	- Curb Contact Length:	16.38
CI	- Curb Clearance Increment:	6.58
CR	- Curb Clearance Radius:	29'6"
CH	- Curb Height:	6"
TR	- Turning Radius:	29'0"
TW	- Tire Width:	12.40

* All Measurements are in inches, unless otherwise specified.

This information is based on engineering information available at this time. Actual figures may vary. Navistar, Inc. cannot accept liability for consequences due to this variance.

The water plant lime lagoon is due to be dredged for the 2020 year. I have procured a bid from Wulfekuhle Injection and Pumping with three different options for removing the used lime.

Option 1- Haul 1 million gallons for $78,265.00

Option 2- Haul 1.5 million gallons for $98,265.00

Option 3- Complete cleanout of lagoon estimated 1.75 million gallons or more for $122,235.00

Work will be performed yet this year weather permitting.

Currently we are full in the lime lagoon. We were delayed in getting the lagoon cleaned out as I waited to procure additional bids, but was unable to find anyone else to submit prices. We were already billed once this year for lime removal and that was for the 2019 cleanout. The cleanout took much longer than expected and due to the length of time it took for the previous contractor to remove the lime, we were filling the lagoon back up so they never got the lagoon emptied to where we needed it. Wulfekuhle has told me they can get the lagoon cleaned out within a week. There are a few small repairs we also need to make to a valve in the lagoon that would require us to have it cleaned out, at least on one side, most of the way down. This is why I propose choosing either option 2 or option 3. I believe option 2 would get us to where we need to be to complete repairs on the valve that drains the water out of the lagoon. Currently we have to run a gas-powered pump daily to drain off he surface water to allow the lime to settle and give us more room in the lagoon. We would like to rectify this problem along with draining the lagoon. At this time, we plan to perform the repairs in house without extra cost to the City of Grimes.

Mayor and City Council,
I have visited the lime lagoon location and have met with USW to discuss the different proposal options with special attention to the valve maintenance needed and reviewed the impact to the budget. With that I would recommend approving Option 2 from Wulfekuhle Injection & Pumping Inc. in the amount of $98,265.00 for the removal of a minimum of 1.5 million gallons of lime slurry.

Wulfekuhle Injection & Pumping Inc.
10746 Cedar Ridge Ct. Peosta, IA 52068 - Brad: 563-451-9584

PROPOSAL NO.
#5634519584
DATE:
10/25/ 2020

Grimes Iowa
Nick Deardorff
ndeardorff@uswatercorp.net

City of Grimes Iowa
Lime Lagoon Cleanout

WE HEREBY PURPOSE TO FURNISH THE MATERIALS AND PERFORM THE LABOR NECESSARY FOR THE COMPLETION OF:

We the undersigned hereby propose to furnish all labor, materials, tools, equipment and services required for disposal of Lime Sludge from Lime Lagoon

- Haul off Lime slurry and Land apply
- Lime to be used as a soil conditioner for agricultural purposes
- We will haul in watertight trucks designed for slurry transportation
- Option 1: Haul 1 million gallons for $78,265.00
- Option 2: Haul 1.5 million gallons for $98,265.00
- Option 3: Complete cleanout of lagoon estimated 1.75 million gallons or more for $122,325.00
- Work to be performed Fall of 2020 weather permitting

ALL MATERIAL IS GUARANTEED TO BE AS SPECIFIED, AND THE ABOVE WORK TO BE PERFORMED IN ACCORDANCE WITH THE DRAWINGS AND SPECIFICATIONS SUBMITTED FOR ABOVE WORK, AND COMPLETED IN A SUBSTANTIAL WORKMANLIKE MANNER FOR THE SUM OF
PROPOSAL VALID FOR 30 DAYS.

WITH PAYMENTS TO BE MADE AS FOLLOWS: **30 DAYS NET**

RESPECTFULLY SUBMITTED _____

ACCEPTANCE OF PROPOSAL

THE ABOVE PRICES, SPECIFICATIONS AND CONDITIONS ARE SATISFACTORY AND ARE HEREBY ACCEPTED. YOU ARE AUTHORIZED TO DO THE WORK AS SPECIFIED. PAYMENTS WILL BE MADE AS OUTLINED ABOVE.

SIGNATURE _____

DATE _____

SIGNATURE _____

Project No.: 190904
Project Name: Reverse Osmosis Water Treatment Plant – Phase 1
Project Manager: Michael Washburn, P.E.

AMENDMENT NO. 2
TO THE
AGREEMENT FOR ENGINEERING SERVICES
FOR
REVERSE OSMOSIS WATER TREATMENT PLANT – PHASE 1
GRIMES, IOWA

This Amendment is made this 10th day of November, 2020 and shall amend the Agreement dated the 13th day of August, 2019, by and between ***McClure Engineering Co, of Clive, Iowa*** (herein referred to as "**Engineer**") and the ***City of Grimes, Iowa*** (hereinafter referred to as "**Owner**"), for the proposed Reverse Osmosis Water Treatment Plant – Phase 1 Project.

It is the intent of the **Owner** to revise the previous Agreement to add the following Scope Items and Fees: Re-design of electrical components based on discrepancies in specifications, missing information, and changes in field conditions, as further detailed in the attached Scope of Services. Re-design of the contract plans and specifications is currently not in Engineer's Scope of Services.

This Amendment authorizes the **Engineer** and establishes fees for the phases stated below.

Payment to the **Engineer** shall be made on a monthly basis, within 30 days of invoice for work completed to date.

3.0 Fee Schedule:

☒ W. Electrical Component Re-Design..... LS (Fixed Fee) ..... $ 35,000.00

LS – Lump Sum

Past due amounts owed shall accrue interest at 1.5% per month from the 30th day. If the **Owner** fails to make monthly payments due the **Engineer**, the **Engineer** may, after giving (7) days written notice to the **Owner,** suspend services under this Agreement.

This Agreement represents the entire and integrated agreement between the **Owner** and the **Engineer** and supersedes all prior negotiations, representations or agreements, either written or oral. This **Amendment** may be amended only by written instrument signed by both the **Owner** and the **Engineer.**

SPECIAL INSTRUCTIONS:

See attached Scope of Services covered under this Amendment.

IN WITNESS WHEREOF, the parties hereto have made and executed this **AMENDMENT** as of the day and year first above written.

OWNER: CITY OF GRIMES, IOWA

By: _____

Title: Mayor

ENGINEER: MCCLURE ENGINEERING CO.

By: _____
Michael Washburn, P.E.

Title: Project Manager

Reverse Osmosis Water Treatment Plant – Phase 1
Grimes, Iowa

Amendment No.2

Scope of Services:

Engineer shall complete the following tasks covered by this Amendment:

1. Calculate and provide missing information on the Electrical Drawings to Contractor (See RFI #79, #81, #82).

2. Make Field Visits to gather existing information, design and provide direction to Contractor to address design changes based on field conditions (See RFI #51 and Contractor's request for further clarification on initial response to RFI #51).

3. Make Field Visits to gather existing information, design and provide Scope of Work to Contractor to address missing Design information in the Electrical Drawings and Specifications (see RFI #55).

4. Make Field Visits to gather existing information, design and provide marked-up revised Electrical One Line Drawings and Scope of Work to Contractor to address discrepancies between Process and Electrical Drawings (see RFI #56 for Transfer Pumps 1, 2 and 3 and for New Pump in Booster Station after Submittal 43 23 13-1.0 is processed).

5. Make Field Visits to gather existing information, redesign, determine and prepare new Schedules for 480/277 volts Feeder Panels H1, HE1 and A, 208/120 volts Branch Panels L1, L2, LE1 and B and 240/120 Volts Branch Panel JW-A, prepare and provide Scope of Work to Contractor to address wrong or changed ampere ratings of feeder circuit breakers and branch circuit breakers because of design omissions, design mistakes, changes required to accommodate Contractor proposed process and HVAC equipment, etc.

Please note that the Contractor may request Change Orders for the Scopes of Work generated from most of the above proposed engineering services. When that happens, Engineer will review those Change Order requests and determine their validity and reasonableness.

-- End Scope of Services --

APPLICATION FOR PARTIAL PAYMENT OF CONTRACT

CITY OF GRIMES

Project Title:	Northwest Territory Lift Station and Forced Main Project		
Contractor:	Veenstra & Kimm, Inc.		
Address:	3000 Westown Parkway, West Des Moines, IA 50266		
Finance Budget Code:	329-815-6407	***Finance Project #***	
Vendor Project or Invoice #:		***PO #***	
Original Contract Date:	April 14, 2020	***Vendor #***	2157

Date of Council Meeting: November 10, 2020 **PAYMENT REQUEST #** 6

PAYMENT PERIOD: From: September 20, 2020 Through: October 17, 2020

Contract Summary

Original Contract Amount:	$ 4,200.00		
Net change by Change Orders:	$ 87,950.00		
Contract Amount to Date: (line 1 ± 2)		$ 92,150.00	
Total completed and stored to date:	$ 24,185.30		
Retainage: 0 % of Completed Work:	$ -		
Total Earned less Retainage:		$ 24,185.30	
Less previous applications for payment:		$ 17,097.30	
SUBTOTAL			$ 7,088.00
OTHER CHARGES (Attach an itemized list)			$ -
CURRENT PAYMENT DUE			$ 7,088.00
Balance to finish, including retainage:		$ 67,964.70	
Contract Time Remaining (If applicable)	- Working Days		

The undersigned Contractor certifies that to the best of the Contractor's knowledge, information and belief the work covered by this Application for Payment has been completed in accordance with the Contract Documents, that all the amounts have been paid by the Contractor for work for which previous Certificate(s) for Payment were issued and payments received from the Owner, and that current payment shown herein is now due.

Construction Contractor Approval:

Firm Name

Signature Date

Engineer / Consultant Approval: Veenstra & Kimm, Inc.

Firm Name

Signature 10/27/2020 Date

City of Grimes Staff Approval:

Signature 10-29-20 Date

Submit to: *Matt Ahrens, P.E. - City Engineer - Engineering Department*

E-mail: Mahrens@Grimeslowa.gov *Phone:* *(515) 986-4050* *Fax:* *(515) 986-4480*

Date Printed: 10/27/2020

APPLICATION FOR PARTIAL PAYMENT OF CONTRACT

Previous Applications for Payment

No.	Date	Amount
1	June 9, 2020	$ 4,099.95
2	July 14, 2020	$ 100.05
3	August 11, 2020	$ 5,264.00
4	September 22, 2020	$ 2,287.30
5	October 13, 2020	$ 5,346.00
6		
7		
8		
9		
10		
11		
12		
13		
14		
15		
16		
17		
18		
19		
20		
21		
22		
23		
24		
25		
26		
27		
28		
29		
30		
31		
32		
33		
34		
35		

Previous Applications for Payment

No.	Date	Amount
36		
37		
38		
39		
40		
41		
42		
43		
44		
45		
46		
47		
48		
49		
50		
51		
52		
53		
54		
55		
56		
57		
58		
59		
60		
61		
62		
63		
64		
65		
66		
67		
68		
69		
70		

TOTAL $ 17,097.30

Record of Change Orders

No.	Date	Amount
1	June 9, 2020	$ 69,750.00
2	September 22, 2020	$ 18,200.00
3		
4		
5		
6		
7		
8		
9		
10		
11		
12		
13		
14		
15		
16		
17		
18		
19		
20		
21		
22		
23		
24		
25		

TOTAL $ 87,950.00

Contract Time Remaining

Contract Period:	Working Days
Original Contract Date:	April 14, 2020
Original Contract Time:	
Added by Change Order:	
Contract Time to Date:	-
Time Used to Date:	
Contract Time Remaining:	-

VEENSTRA & KIMM, INC.
3000 Westown Parkway • West Des Moines, Iowa 50266-1320
515-225-8000 • 515-225-7848 (FAX) • 800-241-8000 (WATS)

STATEMENT OF PROFESSIONAL SERVICES

City of Grimes
Attn: Jake Anderson
101 NE Harvey
Grimes, IA 50111

October 23, 2020
Project No: 128110
Invoice No: 4

Project Manager H. Veenstra

Engineering services for Northwest Territory Lift Station and Forced Main - Phase 2 - Design Services:

Professional Services from September 20, 2020 to October 17, 2020

Professional Personnel

	Hours	Rate	Amount	
Management I	38.00	181.00	6,878.00	
Drafter III	2.50	84.00	210.00	
Totals	40.50		7,088.00	
Total Labor				**7,088.00**

Billing Limits	**Current**	**Prior**	**To-Date**
Total Billings	7,088.00	12,897.30	19,985.30
Limit			87,950.00
Remaining			67,964.70

Total this Invoice **$7,088.00**

Billings to Date

	Current	Prior	Total
Labor	7,088.00	12,050.50	19,138.50
Unit	0.00	846.80	846.80
Totals	**7,088.00**	**12,897.30**	**19,985.30**

APPLICATION FOR PARTIAL PAYMENT OF CONTRACT

CITY OF GRIMES

Project Title:	WRA Connector		
Contractor:	Veenstra & Kimm, Inc.		
Address:	3000 Westown Parkway, West Des Moines, IA 50266		
Finance Budget Code:	328-815-6407	***Finance Project #***	
Vendor Project or Invoice #:		***PO #***	
Original Contract Date:	February 26, 2019	***Vendor #***	2157

Date of Council Meeting: November 10, 2020 **PAYMENT REQUEST #** 23

PAYMENT PERIOD: From: September 20, 2020 Through: October 17, 2020

Contract Summary

Original Contract Amount:	$ 882,000.00		
Net change by Change Orders:	$ -		
Contract Amount to Date: (line 1 ± 2)		$ 882,000.00	
Total completed and stored to date:	$ 300,580.58		
Retainage: 0 % of Completed Work:	$ -		
Total Earned less Retainage:		$ 300,580.58	
Less previous applications for payment:		$ 271,982.68	
SUBTOTAL			$ 28,597.90
OTHER CHARGES (Attach an Itemized list)			$ -
CURRENT PAYMENT DUE			$ 28,597.90
Balance to finish, including retainage:		$ 581,419.42	
Contract Time Remaining (If applicable)	- Working Days		

The undersigned Contractor certifies that to the best of the Contractor's knowledge, information and belief the work covered by this Application for Payment has been completed in accordance with the Contract Documents, that all the amounts have been paid by the Contractor for work for which previous Certificate(s) for Payment were issued and payments received from the Owner, and that current payment shown herein is now due.

Construction Contractor Approval:

Firm Name

Signature Date

Engineer / Consultant Approval: Veenstra & Kimm, Inc.

Firm Name

Signature 10/27/2020 Date

City of Grimes Staff Approval:

Signature 10-29-20 Date

Submit to: *Matt Ahrens, P.E. - City Engineer - Engineering Department*

E-mail: Mahrens@Grimeslowa.gov *Phone:* *(515) 986-4050* *Fax:* *(515) 986-4480*

Date Printed: 10/27/2020

APPLICATION FOR PARTIAL PAYMENT OF CONTRACT

Previous Applications for Payment

No.	Date	Amount
1	April 9, 2019	$ 3,410.10
2	May 14, 2019	$ 3,784.00
3	June 11, 2019	$ 3,084.78
4	July 9, 2019	$ 4,757.29
5	August 13, 2019	$ 1,845.40
6	September 10, 2019	$ 228.91
7	October 8, 2019	$ 877.32
8	November 12, 2019	$ 4,026.12
9	December 9, 2019	$ 9,595.24
10	January 14, 2020	$ 4,855.90
11	February 11, 2020	$ 2,699.94
12	March 10, 2020	$ 1,328.45
13	April 14, 2020	$ 1,506.55
14	February 11, 2020	$ 24,359.53
15	March 10, 2020	$ 10,500.50
16	April 14, 2020	$ 5,165.23
17	May 12, 2020	$ 11,490.30
18	June 9, 2020	$ 6,605.10
19	July 14, 2020	$ 57,078.16
20	August 11, 2020	$ 36,812.00
21	September 22, 2020	$ 45,013.14
22	October 13, 2020	$ 32,958.72
23		
24		
25		
26		
27		
28		
29		
30		
31		
32		
33		
34		
35		

Previous Applications for Payment

No.	Date	Amount
36		
37		
38		
39		
40		
41		
42		
43		
44		
45		
46		
47		
48		
49		
50		
51		
52		
53		
54		
55		
56		
57		
58		
59		
60		
61		
62		
63		
64		
65		
66		
67		
68		
69		
70		

TOTAL $ 271,982.68

Record of Change Orders

No.	Date	Amount
1		
2		
3		
4		
5		
6		
7		
8		
9		
10		
11		
12		
13		
14		
15		
16		
17		
18		
19		
20		
21		
22		
23		
24		
25		

TOTAL $ -

Contract Time Remaining

Contract Period:	Working Days
Original Contract Date:	February 26, 2019
Original Contract Time:	
Added by Change Order:	
Contract Time to Date:	-
Time Used to Date:	
Contract Time Remaining:	-

Date Printed: 10/27/2020

VEENSTRA & KIMM, INC.
3000 Westown Parkway • West Des Moines, Iowa 50266-1320
515-225-8000 • 515-225-7848 (FAX) • 800-241-8000 (WATS)

STATEMENT OF PROFESSIONAL SERVICES

City of Grimes
Attn: Jake Anderson
101 NE Harvey
Grimes, IA 50111

October 23, 2020
Project No: 128107
Invoice No: 10

Project Manager H. Veenstra

Engineering services for WRA Connector - Phase 2 - Design Services:

Professional Services from September 20, 2020 to October 17, 2020

Professional Personnel

	Hours	Rate	Amount	
Management I	27.00	181.00	4,887.00	
Clerical II	2.50	66.00	165.00	
Clerical IV	.50	50.00	25.00	
Drafter IA	72.00	103.00	7,416.00	
Drafter III	68.00	84.00	5,712.00	
Surveyor I	12.00	123.00	1,476.00	
Technician I	52.00	90.00	4,680.00	
Technician II	30.50	83.00	2,531.50	
Technician V	3.50	67.00	234.50	
Totals	268.00		27,127.00	
Total Labor				**27,127.00**

Unit Billing

Duplication-11X17 Color	1.65	
GPS	90.00	
GPS	1,110.00	
Mileage	118.45	
Robotics	150.00	
Duplication-8.5 X11 Color	.80	
Total Units	**1,470.90**	**1,470.90**

Billing Limits	**Current**	**Prior**	**To-Date**
Total Billings	28,597.90	229,982.68	258,580.58
Limit			430,000.00
Remaining			171,419.42

Total this Invoice **$28,597.90**

Billings to Date

	Current	Prior	Total
Labor	27,127.00	214,120.50	241,247.50
Unit	1,470.90	15,862.18	17,333.08
Totals	**28,597.90**	**229,982.68**	**258,580.58**

APPLICATION FOR PARTIAL PAYMENT OF CONTRACT

CITY OF GRIMES

Project Title: Connection Fee Distrct Ordinances
Contractor: Veenstra & Kimm, Inc.
Address: 3000 Westown Parkway, West Des Moines, IA 50266
Finance Budget Code: 001-170-6420 ***Finance Project #***
Vendor Project or Invoice #: ***PO #***
Original Contract Date: ***Vendor #*** 2157

Date of Council Meeting: 11/10/220 **PAYMENT REQUEST #** 3
PAYMENT PERIOD: From: September 20, 2020 Through: October 17, 2020

Contract Summary

Original Contract Amount:			
Net change by Change Orders:	$ -		
Contract Amount to Date: (line 1 ± 2)		$ -	
Total completed and stored to date:	$ 1,893.00		
Retainage: 0 % of Completed Work:	$ -		
Total Earned less Retainage:		$ 1,893.00	
Less previous applications for payment:		$ 1,273.00	
SUBTOTAL			$ 620.00
OTHER CHARGES (Attach an itemized list)			$ -
CURRENT PAYMENT DUE			$ 620.00
Balance to finish, including retainage:			
Contract Time Remaining (If applicable)	- Working Days		

The undersigned Contractor certifies that to the best of the Contractor's knowledge, information and belief the work covered by this Application for Payment has been completed in accordance with the Contract Documents, that all the amounts have been paid by the Contractor for work for which previous Certificate(s) for Payment were issued and payments received from the Owner, and that current payment shown herein is now due.

Construction Contractor Approval:
Firm Name
Signature Date

Engineer / Consultant Approval: Veenstra & Kimm, Inc.
Firm Name
Signature 10/27/2020 Date

City of Grimes Staff Approval:
Signature 10-29-20 Date

Submit to: *Matt Ahrens, P.E. - City Engineer - Engineering Department*
E-mail: Mahrens@Grimeslowa.gov *Phone:* *(515) 986-4050* *Fax:* *(515) 986-4480*

Date Printed: 10/27/2020

APPLICATION FOR PARTIAL PAYMENT OF CONTRACT

Previous Applications for Payment

No.	Date	Amount
1	September 22, 2020	$ 362.00
2	October 13, 2020	$ 911.00
3		
4		
5		
6		
7		
8		
9		
10		
11		
12		
13		
14		
15		
16		
17		
18		
19		
20		
21		
22		
23		
24		
25		
26		
27		
28		
29		
30		
31		
32		
33		
34		
35		

Previous Applications for Payment

No.	Date	Amount
36		
37		
38		
39		
40		
41		
42		
43		
44		
45		
46		
47		
48		
49		
50		
51		
52		
53		
54		
55		
56		
57		
58		
59		
60		
61		
62		
63		
64		
65		
66		
67		
68		
69		
70		

TOTAL $ 1,273.00

Record of Change Orders

No.	Date	Amount
1		
2		
3		
4		
5		
6		
7		
8		
9		
10		
11		
12		
13		
14		
15		
16		
17		
18		
19		
20		
21		
22		
23		
24		
25		

TOTAL $ -

Contract Time Remaining

Contract Period:	Working Days
Original Contract Date:	February 26, 2019
Original Contract Time:	
Added by Change Order:	
Contract Time to Date:	-
Time Used to Date:	
Contract Time Remaining:	-

Date Printed: 10/27/2020

VEENSTRA & KIMM, INC.
3000 Westown Parkway • West Des Moines, Iowa 50266-1320
515-225-8000 • 515-225-7848 (FAX) • 800-241-8000 (WATS)

STATEMENT OF PROFESSIONAL SERVICES

City of Grimes
Attn: Jake Anderson
101 NE Harvey
Grimes, IA 50111

October 23, 2020
Project No: 128111
Invoice No: 3

Project Manager H. Veenstra

Engineering services for Connection Fee District Ordinances:

Professional Services from September 20, 2020 to October 17, 2020

Professional Personnel

	Hours	Rate	Amount	
Management I	2.00	181.00	362.00	
Clerical II	2.00	66.00	132.00	
Drafter III	1.50	84.00	126.00	
Totals	5.50		620.00	
Total Labor				**620.00**

Billing Limits	**Current**	**Prior**	**To-Date**
Total Billings	620.00	1,273.00	1,893.00
Limit			2,500.00
Remaining			607.00

Total this Invoice **$620.00**

Billings to Date

	Current	Prior	Total
Labor	620.00	1,273.00	1,893.00
Totals	**620.00**	**1,273.00**	**1,893.00**

APPLICATION FOR PARTIAL PAYMENT OF CONTRACT

CITY OF GRIMES

Project Title:	2020 Signal Network Communication ICAAP Application		
Contractor:	Snyder & Associates, Inc.		
Address:	2727 Snyder Blvd., PO Box 1159, Ankeny Iowa 50023		
Finance Budget Code:	340-230-6407	***Finance Project #***	
Vendor Project or Invoice #:	120.0854.01	***PO #***	
Original Contract Date:	August 11, 2020	***Vendor #***	2031

Date of Council Meeting: November 10, 2020 **PAYMENT REQUEST #** 1

PAYMENT PERIOD: From: August 11, 2020 Through: September 30, 2020

Contract Summary

Original Contract Amount:	$ 6,000.00		
Net change by Change Orders:	$ -		
Contract Amount to Date: (line 1 ± 2)		$ 6,000.00	
Total completed and stored to date:	$ 6,000.00		
Retainage: 0 % of Completed Work:	$ -		
Total Earned less Retainage:		$ 6,000.00	
Less previous applications for payment:		$ -	
SUBTOTAL			$ 6,000.00
OTHER CHARGES (Attach an itemized list)			
CURRENT PAYMENT DUE			$ 6,000.00
Balance to finish, including retainage:		$ -	
Contract Time Remaining (If applicable)	-	Working Days	

The undersigned Contractor certifies that to the best of the Contractor's knowledge, information and belief the work covered by this Application for Payment has been completed in accordance with the Contract Documents, that all the amounts have been paid by the Contractor for work for which previous Certificate(s) for Payment were issued and payments received from the Owner, and that current payment shown herein is now due.

Construction Contractor Approval:

Firm Name

Signature Date

Engineer / Consultant Approval: Snyder & Associates, Inc.

Firm Name

Todd Knox 10/26/2020

Signature Date

City of Grimes Staff Approval: Matt Ahrens 10-29-20

Signature Date

City of Grimes Council Approval:

Signature Date

Submit to: *Matt Ahrens, P.E. - City Engineer - Engineering Department*

E-mail: mahrens@grimesiowa.gov *Phone:* *(515) 986-4050* *Fax:* *(515) 986-4480*

Date Printed: 10/26/2020

APPLICATION FOR PARTIAL PAYMENT OF CONTRACT

Previous Applications for Payment

No.	Date	Amount
1		
2		
3		
4		
5		
6		
7		
8		
9		
10		
11		
12		
13		
14		
15		
16		
17		
18		
19		
20		
21		
22		
23		
24		
25		
26		
27		
28		
29		
30		
31		
32		
33		
34		
35		

Previous Applications for Payment

No.	Date	Amount
36		
37		
38		
39		
40		
41		
42		
43		
44		
45		
46		
47		
48		
49		
50		
51		
52		
53		
54		
55		
56		
57		
58		
59		
60		
61		
62		
63		
64		
65		
66		
67		
68		
69		
70		

TOTAL $ -

Record of Change Orders

No.	Date	Amount
1		
2		
3		
4		
5		
6		
7		
8		
9		
10		
11		
12		
13		
14		
15		
16		
17		
18		
19		
20		
21		
22		
23		
24		
25		

TOTAL $ -

Contract Time Remaining

Contract Period:	Working Days
Original Contract Date:	August 11, 2020
Original Contract Time:	
Added by Change Order:	
Contract Time to Date:	-
Time Used to Date:	
Contract Time Remaining:	-

SNYDER & ASSOCIATES

IOWA | MISSOURI | NEBRASKA | SOUTH DAKOTA | WISCONSIN

INVOICE FOR PROFESSIONAL SERVICES

October 26, 2020

Matt Ahrens
City of Grimes
101 NE Harvey Street
Grimes, IA 50111

Invoice No: 120.0854.01 - 1

Finance Budget Code 340-230-6407

Vendor 2031

Email 'mahrens@grimesiowa.gov'

Project **120.0854.01** **2020 Signal Network Communication ICAAP Application**

Professional Services through September 30, 2020

ICAAP App

		Hours	Rate	Amount	
Engineer VII		9.00	160.00	1,440.00	
Planner V		4.00	142.00	568.00	
Engineer IV		38.50	132.00	5,082.00	
	Total Services	51.50		7,090.00	
	Total Services				**7,090.00**

Billing Limits	**Current**	**Prior**	**To-Date**	
Total Billings	7,090.00	0.00	7,090.00	
Limit			6,000.00	
Adjustment				**-1,090.00**
			Task Subtotal	**$6,000.00**

	Total	**Prior**	**Current**
Billings to Date	**6,000.00**	**0.00**	**6,000.00**

Amount Due this Invoice **$6,000.00**

	Total	**Prior**	**Current**
Billings to Date	**6,000.00**	**0.00**	**6,000.00**

Thank you. We appreciate the opportunity to serve you.

Accounts Receivable Inquiry: ar@snyder-associates.com

Project Manager: Todd Knox

APPLICATION FOR PARTIAL PAYMENT OF CONTRACT

CITY OF GRIMES

Project Title:	SW County Line Road Improvements Construction Services		
Engineer:	Bolton & Menk, Inc.		
Address:	309 E 5th Street, Suite 202,Des Moines, IA 50309-1981		
Finance Budget Code:	308-210-6407	***Finance Project #***	
Vendor Project or Invoice #:	257658	***PO #***	
Original Contract Date:	August 13, 2019	***Vendor #***	2820

Date of Council Meeting: November 10, 2020 **PAYMENT REQUEST #** 13

PAYMENT PERIOD: From: September 26, 2020 Through: October 23, 2020

Contract Summary

Original Contract Amount:	$ 332,000.00		
Net change by Change Orders:	$ -		
Contract Amount to Date: (line 1 ± 2)		$ 332,000.00	
Total completed and stored to date:	$ 189,253.50		
Retainage: 0 % of Completed Work:	$ -		
Total Earned less Retainage:		$ 189,253.50	
Less previous applications for payment:		$ 157,859.50	
SUBTOTAL			$ 31,394.00
OTHER CHARGES (Attach an itemized list)			$ -
CURRENT PAYMENT DUE			$ 31,394.00
Balance to finish, including retainage:		$ 142,746.50	
Contract Time Remaining (If applicable)	-		

The undersigned Contractor certifies that to the best of the Contractor's knowledge, information and belief the work covered by this Application for Payment has been completed in accordance with the Contract Documents, that all the amounts have been paid by the Contractor for work for which previous Certificate(s) for Payment were issued and payments received from the Owner, and that current payment shown herein is now due.

Construction Contractor Approval:

Firm Name

Signature Date

Engineer / Consultant Approval: Bolton & Menk, Inc.

Firm Name

CNKaNAA 27 OCT 2020

Signature Date

City of Grimes Staff Approval:

Matt Ahrens 10-29-20

Signature Date

Submit to: *Matt Ahrens, P.E. - City Engineer - Engineering Department*

E-mail: Mahrens@Grimeslowa.gov *Phone:* *(515) 986-4050* *Fax:* *(515) 986-4480*

Date Printed: 10/27/2020

APPLICATION FOR PARTIAL PAYMENT OF CONTRACT

Previous Applications for Payment

No.	Date	Amount	BMI Invoice #
1	October 22, 2019	$ 60.00	239655
2	December 9, 2019	$ 708.00	241546
3	January 14, 2020	$ 8,435.50	242867
4	February 11, 2020	$ 9,109.00	244360
5	April 14, 2020	$ 19,981.00	245955
6	April 14, 2020	$ 16,605.00	246887
7	May 12, 2020	$ 15,242.00	248002
8	June 9, 2020	$ 25,845.50	249838
9	July 14, 2020	$ 11,421.00	251443
10	August 11, 2020	$ 13,132.00	253003
11	September 8, 2020	$ 23,347.00	254502
12	October 13, 2020	$ 13,973.50	255929
13			
14			
15			
16			
17			
18			
19			
20			
21			
22			
23			
24			
25			
26			
27			
28			
29			
30			
31			
32			
33			
34			
35			

Previous Applications for Payment

No.	Date	Amount
36		
37		
38		
39		
40		
41		
42		
43		
44		
45		
46		
47		
48		
49		
50		
51		
52		
53		
54		
55		
56		
57		
58		
59		
60		
61		
62		
63		
64		
65		
66		
67		
68		
69		
70		

TOTAL **$ 157,859.50**

Record of Change Orders

No.	Date	Amount
1		
2		
3		
4		
5		
6		
7		
8		
9		
10		
11		
12		
13		
14		
15		
16		
17		
18		
19		
20		
21		
22		
23		
24		
25		

TOTAL **$ -**

Contract Time Remaining

Contract Period:	CLICK TO CHOOSE
Original Contract Date:	August 13, 2019
Original Contract Time:	
Added by Change Order:	
Contract Time to Date:	-
Time Used to Date:	
Contract Time Remaining:	-

Date Printed: 10/27/2020

INVOICE

BOLTON & MENK

Real People. Real Solutions.

Please Remit To: Bolton & Menk, Inc.
1960 Premier Drive | Mankato, MN 56001-5900
507-625-4171 | 507-625-4177 (fax)
www.Bolton-Menk.com
To Ensure Proper Credit, Provide Invoice Numbers with Payment

2020 *0257658* *A13.119556*

City of Grimes
101 NE Harvey Street
Grimes, IA 50111

September 25, 2020
Project No: A13.119556
Invoice No: 0257658
Client Account: GRIMES_CI_IA

Grimes/County Line Road Construction

Construction Administration (001)
Professional Services

		Hours	Amount	
Principal		13.00	2,080.00	
Administrative		4.50	315.00	
Specialist		2.00	154.00	
	Totals	19.50	2,549.00	
	Total Labor			**2,549.00**
			Total this Task	**$2,549.00**

Construction Observation (002)
Professional Services

		Hours	Amount	
Principal		19.00	3,040.00	
Design Engineer		122.50	14,350.00	
Technician		174.50	11,455.00	
	Totals	316.00	28,845.00	
	Total Labor			**28,845.00**
			Total this Task	**$28,845.00**
			Total this Invoice	**$31,394.00**

Notice: A finance charge of 1.5% per month (annual percentage of 18%) is charged on balances 30 days or over.

APPLICATION FOR PARTIAL PAYMENT OF CONTRACT

CITY OF GRIMES

Project Title:	HIGHWAY 44 & SW COUNTY LINE ROAD INTERSECTION IMPROVEMENTS		
Engineer:	Bolton & Menk, Inc.		
Address:	309 E 5th Street, Suite 202,Des Moines, IA 50309-1981		
Finance Budget Code:	334-210-6407	***Finance Project #***	
Vendor Project or Invoice #:	257659	***PO #***	
Original Contract Date:	October 22, 2019	***Vendor #***	2820

Date of Council Meeting: November 10, 2020 **PAYMENT REQUEST #** 10

PAYMENT PERIOD: From: September 26, 2020 Through: October 23, 2020

Contract Summary

Original Contract Amount:	$ 286,000.00		
Net change by Change Orders:	$ -		
Contract Amount to Date: (line 1 ± 2)		$ 286,000.00	
Total completed and stored to date:	$ 60,469.40		
Retainage: 0 % of Completed Work:	$ -		
Total Earned less Retainage:		$ 60,469.40	
Less previous applications for payment:		$ 59,446.90	
SUBTOTAL			$ 1,022.50
OTHER CHARGES (Attach an itemized list)			$ -
CURRENT PAYMENT DUE			$ 1,022.50
Balance to finish, including retainage:		$ 225,530.60	
Contract Time Remaining (If applicable)	-		

The undersigned Contractor certifies that to the best of the Contractor's knowledge, information and belief the work covered by this Application for Payment has been completed in accordance with the Contract Documents, that all the amounts have been paid by the Contractor for work for which previous Certificate(s) for Payment were issued and payments received from the Owner, and that current payment shown herein is now due.

Construction Contractor Approval:

Firm Name

Signature Date

Engineer / Consultant Approval: Bolton & Menk, Inc.

Firm Name

CNKaNAA 27 OCT 2020

Signature Date

City of Grimes Staff Approval:

Matt Ahrens 10-29-20

Signature Date

Submit to: *Matt Ahrens, P.E. - City Engineer - Engineering Department*

E-mail: Mahrens@Grimeslowa.gov *Phone:* *(515) 986-4050* *Fax:* *(515) 986-4480*

Date Printed: 10/27/2020

APPLICATION FOR PARTIAL PAYMENT OF CONTRACT

Previous Applications for Payment

No.	Date	Amount	BMI Invoice #
1	January 14, 2020	$ 1,730.00	242868
2	February 11, 2020	$ 6,434.90	244361
3	April 14, 2020	$ 1,627.00	245964
4	April 14, 2020	$ 2,195.00	246888
5	June 9, 2020	$ 7,097.50	249839
6	July 14, 2020	$ 6,792.50	251444
7	August 11, 2020	$ 11,325.00	253004
8	September 8, 2020	$ 17,430.00	254565
9	October 13, 2020	$ 4,815.00	255930
10			
11			
12			
13			
14			
15			
16			
17			
18			
19			
20			
21			
22			
23			
24			
25			
26			
27			
28			
29			
30			
31			
32			
33			
34			
35			

Previous Applications for Payment

No.	Date	Amount
36		
37		
38		
39		
40		
41		
42		
43		
44		
45		
46		
47		
48		
49		
50		
51		
52		
53		
54		
55		
56		
57		
58		
59		
60		
61		
62		
63		
64		
65		
66		
67		
68		
69		
70		

TOTAL **$ 59,446.90**

Record of Change Orders

No.	Date	Amount
1		
2		
3		
4		
5		
6		
7		
8		
9		
10		
11		
12		
13		
14		
15		
16		
17		
18		
19		
20		
21		
22		
23		
24		
25		

TOTAL **$ -**

Contract Time Remaining

Contract Period:	CLICK TO CHOOSE
Original Contract Date:	October 22, 2019
Original Contract Time:	
Added by Change Order:	
Contract Time to Date:	-
Time Used to Date:	
Contract Time Remaining:	-

Date Printed: 10/27/2020

INVOICE

BOLTON & MENK

Real People. Real Solutions.

Please Remit To: Bolton & Menk, Inc.
1960 Premier Drive | Mankato, MN 56001-5900
507-625-4171 | 507-625-4177 (fax)
www.Bolton-Menk.com
To Ensure Proper Credit, Provide Invoice Numbers with Payment

2020

0257659

A13.120005

City of Grimes
101 NE Harvey Street
Grimes, IA 50111

September 25, 2020
Project No: A13.120005
Invoice No: 0257659
Client Account: GRIMES_CI_IA

Grimes/Highway 44 & SW Co Line Road

Highway 44 & SW County Line Road Intersection Improvements
Professional Services

	Hours	Amount	
Principal	2.00	320.00	
Administrative	1.00	70.00	
Project Engineer	3.50	472.50	
Technician	2.00	160.00	
Totals	8.50	1,022.50	
Total Labor			**1,022.50**
		Total this Invoice	**$1,022.50**

Notice: A finance charge of 1.5% per month (annual percentage of 18%) is charged on balances 30 days or over.

APPLICATION FOR PARTIAL PAYMENT OF CONTRACT

CITY OF GRIMES

Project Title:	Hope Commercial Plat 1 Public Improvements Construction Services		
Engineer:	Bolton & Menk, Inc.		
Address:	309 E 5th Street, Suite 202,Des Moines, IA 50309-1981		
Finance Budget Code:	314-210-6407	***Finance Project #***	
Vendor Project or Invoice #:	257660	***PO #***	
Original Contract Date:	August 13, 2019	***Vendor #***	2820

Date of Council Meeting: November 10, 2020 **PAYMENT REQUEST #** 12

PAYMENT PERIOD: From: September 26, 2020 Through: October 23, 2020

Contract Summary

Original Contract Amount:	$ 10,000.00		
Net change by Change Orders:	$ 256,000.00		
Contract Amount to Date: (line 1 ± 2)		$ 266,000.00	
Total completed and stored to date:	$ 119,176.50		
Retainage: 0 % of Completed Work:	$ -		
Total Earned less Retainage:		$ 119,176.50	
Less previous applications for payment:		$ 102,796.50	
SUBTOTAL			$ 16,380.00
OTHER CHARGES (Attach an itemized list)			$ -
CURRENT PAYMENT DUE			$ 16,380.00
Balance to finish, including retainage:		$ 146,823.50	
Contract Time Remaining (If applicable)	-		

The undersigned Contractor certifies that to the best of the Contractor's knowledge, information and belief the work covered by this Application for Payment has been completed in accordance with the Contract Documents, that all the amounts have been paid by the Contractor for work for which previous Certificate(s) for Payment were issued and payments received from the Owner, and that current payment shown herein is now due.

Construction Contractor Approval:

Firm Name

Signature Date

Engineer / Consultant Approval: Bolton & Menk, Inc.

Firm Name

CNKaNA 27 OCT 2020

Signature Date

City of Grimes Staff Approval:

Matt Ahrens 10-29-20

Signature Date

Submit to: *Matt Ahrens, P.E. - City Engineer - Engineering Department*

E-mail: Mahrens@GrimesIowa.gov *Phone:* *(515) 986-4050* *Fax:* *(515) 986-4480*

Date Printed: 10/27/2020

APPLICATION FOR PARTIAL PAYMENT OF CONTRACT

Previous Applications for Payment

No.	Date	Amount	BMI Invoice #
1	October 22, 2019	$ 2,101.00	239656
2	December 9, 2019	$ 6,284.00	241547
3	January 14, 2020	$ 9,772.50	242871
4	February 11, 2020	$ 4,839.00	244362
5	April 14, 2020	$ 3,655.00	245963
6	April 14, 2020	$ 2,330.00	246889
7	June 9, 2020	$ 15,510.00	249848
8	July 14, 2020	$ 13,255.00	251445
9	August 11, 2020	$ 9,132.50	253005
10	September 8, 2020	$ 19,060.00	254503
11	October 13, 2020	$ 16,857.50	255931
12			
13			
14			
15			
16			
17			
18			
19			
20			
21			
22			
23			
24			
25			
26			
27			
28			
29			
30			
31			
32			
33			
34			
35			

Previous Applications for Payment

No.	Date	Amount
36		
37		
38		
39		
40		
41		
42		
43		
44		
45		
46		
47		
48		
49		
50		
51		
52		
53		
54		
55		
56		
57		
58		
59		
60		
61		
62		
63		
64		
65		
66		
67		
68		
69		
70		

TOTAL **$ 102,796.50**

Record of Change Orders

No.	Date	Amount
1	October 8, 2019	$ 256,000.00
2		
3		
4		
5		
6		
7		
8		
9		
10		
11		
12		
13		
14		
15		
16		
17		
18		
19		
20		
21		
22		
23		
24		
25		

TOTAL **$ 256,000.00**

Contract Time Remaining

Contract Period:	CLICK TO CHOOSE
Original Contract Date:	August 13, 2019
Original Contract Time:	
Added by Change Order:	
Contract Time to Date:	-
Time Used to Date:	
Contract Time Remaining:	-

Date Printed: 10/27/2020

INVOICE

BOLTON & MENK

Real People. Real Solutions.

Please Remit To: Bolton & Menk, Inc.
1960 Premier Drive | Mankato, MN 56001-5900
507-625-4171 | 507-625-4177 (fax)
www.Bolton-Menk.com
To Ensure Proper Credit, Provide Invoice Numbers with Payment

2020 *0257660* *A13.119557*

City of Grimes
101 NE Harvey Street
Grimes, IA 50111

September 25, 2020
Project No: A13.119557
Invoice No: 0257660
Client Account: GRIMES_CI_IA

Grimes/Hope Commercial Plat 1 Public

Construction Services (005)
Professional Services

	Hours	Amount	
Principal	33.00	5,280.00	
Administrative	1.00	70.00	
Design Engineer	54.00	6,220.00	
Technician	74.00	4,810.00	
Totals	162.00	16,380.00	
Total Labor			**16,380.00**
		Total this Task	**$16,380.00**
		Total this Invoice	**$16,380.00**

Notice: A finance charge of 1.5% per month (annual percentage of 18%) is charged on balances 30 days or over.

INVOICE

ALLENDER BUTZKE ENGINEERS INC.

TO: City of Grimes
101 NE Harvey Street
Grimes, IA 50111

PROJECT NO: 195247

INVOICE NO: 195247BW10

PLEASE INCLUDE INVOICE NUMBER ON REMITTANCE ADVICE

RE: Special Inspections (Biweekly 10/14/20 - 10/27/20)
Grimes RO WTP
NW 18th St & N James St, Grimes, Iowa

INVOICE DATE: 11/3/2020

Description of Services	Amount	Unit Price	Total
Technician III	6.5 hrs	$63.00 /Hour	$409.50
Technician III Overtime Rate	0.5 hrs	$94.50 /Hour	$47.25
Transportation Charges	60.0 miles	$0.78 /Mile	$46.80
Nuclear moisture/density gauge	6.0 tests	$14.75 /Test	$88.50
Engineering Review & Report Preparation	1.5 hrs	$148.00 /Hour	$222.00
Compressive Strength of Cylinder ASTM C39 (set of 3)	8.0 tests	$19.50 /Test	$156.00
Disposable cylinder molds	8.0 ea	$2.80 /Ea.	$22.40
Concrete Reports: 10/15/20 through 10/28/20			
Compaction Tests: 10/27/20			
		Total Due	**$992.45**

REMIT TO: **ALLENDER BUTZKE ENGINEERS, INC.**
3660 109th Street
Urbandale, Iowa 50322
Phone No. 515-252-1885

Total invoice amount due upon receipt of invoice. Accounts not paid within 30 days after invoice date are subject to a 1 1/2% per month late charge.

PLEASE INCLUDE INVOICE NUMBER ON REMITTANCE ADVICE

When you provide a check as payment, you authorize us either to use information from your check to make a one-time electronic fund transfer from your account or to process the payment as a check transaction. When we use information from your check to make an electronic fund transfer, funds may be withdrawn from your account as soon as the same day we receive your payment, and you will not receive the check back from your financial institution.

WHITFIELD & EDDY LAW

699 Walnut Street, Suite 2000
Des Moines, IA 50309
Telephone: 515-288-6041
Federal ID. No 42-0643980

October 31, 2020

City of Grimes, Iowa
101 N. Harvey St.
Grimes, IA 50111

Invoice:	265262
Client:	176170
Matter:	0882
Billing Attorney:	TIH

INVOICE SUMMARY

For Professional Services Rendered through September 30, 2020

RE: WRA Sewer Project-Sewer Project

Total Professional Services	$ 6,982.50
Total Costs	$ .00
TOTAL CURRENT INVOICE	**$ 6,982.50**

WHITFIELD & EDDY LAW

699 Walnut Street, Suite 2000
Des Moines, IA 50309
Telephone: 515-288-6041
Federal ID. No 42-0643980

October 31, 2020

City of Grimes, Iowa
Grimes City Hall
P. O. Box 457
Grimes, IA 50111

Invoice:	265260
Client:	176170
Matter:	0101
Billing Attorney:	TIH

INVOICE SUMMARY

For Professional Services Rendered through September 30, 2020

RE: City Of Grimes - General

Total Professional Services	$ 15,840.00
Total Costs	$ .00
TOTAL CURRENT INVOICE	**$ 15,840.00**

THOMAS HENDERSON
699 WALNUT STREET, SUITE 2000
DES MOINES, IOWA 50309

whitfieldlaw.com

515-288-6041 P 515-246-1474 F

515-246-5559 D
henderson@whitfieldlaw.com

WHITFIELD & EDDY LAW

November 2, 2020

Rochelle Williams
City Clerk
101 N. Harvey Street
Grimes, IA 50111

Re: City of Grimes Legal Services (176170-102)

ACTION	AMOUNT
Attendance at council meeting on September 8, 2020 and September 22, 2020	$400.00
TOTAL	**$400.00**

APPLICATION FOR PARTIAL PAYMENT OF CONTRACT

CITY OF GRIMES

Project Title:	Pavement Management Study		
Contractor:	HR Green, Inc.		
Address:	PO Box 8213, Des Moines, IA 50301-8213		
Finance Budget Code:	344-210-6407	***Finance Project #***	
Vendor Project or Invoice #:	PN 200807/Inv 138613	***PO #***	
Original Contract Date:	August 11, 2020	***Vendor #***	2628

Date of Council Meeting: 11-10-20 **PAYMENT REQUEST #** 1

PAYMENT PERIOD: From: August 11, 2020 Through: September 25, 2020

Contract Summary

Original Contract Amount:	$ 60,000.00		
Net change by Change Orders:	$ -		
Contract Amount to Date: (line 1 ± 2)		$ 60,000.00	
Total completed and stored to date:	$ 5,950.50		
Retainage: 0 % of Completed Work:	$ -		
Total Earned less Retainage:		$ 5,950.50	
Less previous applications for payment:		$ -	
SUBTOTAL			$ 5,950.50
OTHER CHARGES (Attach an itemized list)			$ -
CURRENT PAYMENT DUE			$ 5,950.50
Balance to finish, including retainage:		$ 54,049.50	
Contract Time Remaining (If applicable)	- Working Days		

The undersigned Contractor certifies that to the best of the Contractor's knowledge, information and belief the work covered by this Application for Payment has been completed in accordance with the Contract Documents, that all the amounts have been paid by the Contractor for work for which previous Certificate(s) for Payment were issued and payments received from the Owner, and that current payment shown herein is now due.

Construction Contractor Approval: HR Green, Inc.
Firm Name

Signature November 4, 2020
Date

Engineer / Consultant Approval:
Firm Name

Signature Date

City of Grimes Staff Approval: Matt Ahrens 11-4-20
Signature Date

City of Grimes Council Approval:

Signature Date

Submit to: *Matt Ahrens, P.E. - City Engineer - Engineering Department*

E-mail: mahrens@grimesiowa.gov *Phone:* *(515) 986-4050* *Fax:* *(515) 986-4480*

Date Printed: 11/4/2020

APPLICATION FOR PARTIAL PAYMENT OF CONTRACT

Previous Applications for Payment

No.	Date	Amount
1		
2		
3		
4		
5		
6		
7		
8		
9		
10		
11		
12		
13		
14		
15		
16		
17		
18		
19		
20		
21		
22		
23		
24		
25		
26		
27		
28		
29		
30		
31		
32		
33		
34		
35		

Previous Applications for Payment

No.	Date	Amount
36		
37		
38		
39		
40		
41		
42		
43		
44		
45		
46		
47		
48		
49		
50		
51		
52		
53		
54		
55		
56		
57		
58		
59		
60		
61		
62		
63		
64		
65		
66		
67		
68		
69		
70		

TOTAL $ -

Record of Change Orders

No.	Date	Amount
1		
2		
3		
4		
5		
6		
7		
8		
9		
10		
11		
12		
13		
14		
15		
16		
17		
18		
19		
20		
21		
22		
23		
24		
25		

TOTAL $ -

Contract Time Remaining

Contract Period:	Working Days
Original Contract Date:	8-11-20
Original Contract Time:	
Added by Change Order:	
Contract Time to Date:	-
Time Used to Date:	
Contract Time Remaining:	-

Date Printed: 11/4/2020

HRGreen®

Please Remit To:
HR Green, Inc.
PO Box 8213
Des Moines, IA 50301-8213
1-800-728-7805

Matt Ahrens
City of Grimes, IA
410 SE Main Street #102
Grimes, IA 50111

October 13, 2020
Project No: 200807
Invoice No: 138613

Invoice Total: $5,950.50

Project 200807 Grimes, IA - Pavement Management Program

Professional Services Through September 25, 2020

Phase 1000 Project Management & Meetings

Professional Personnel

	Hours	Amount	
Senior Professional	6.00	1,230.00	
Junior Professional	13.50	1,485.00	
Admin Coordinator	.50	45.50	
Totals	20.00	2,760.50	
Total Labor			**2,760.50**
		Total this Phase	**$2,760.50**

Phase 3000 Data Analysis

Professional Personnel

	Hours	Amount	
Junior Professional	29.00	3,190.00	
Totals	29.00	3,190.00	
Total Labor			**3,190.00**
		Total this Phase	**$3,190.00**

Billing Limits	**Current**	**Prior**	**To-Date**
Total Billings	5,950.50	0.00	5,950.50
Limit			50,000.00
Remaining			44,049.50

Total this Invoice **$5,950.50**

Payment is due within 30 days unless prior arrangements are made. Interest of 1.5% per month will be levied on overdue balances.

APPLICATION FOR PARTIAL PAYMENT OF CONTRACT

CITY OF GRIMES

Project Title:	Concept Planning - WRA Sanitary Sewer Connection		
Engineer:	Civil Design Advantage		
Address:	3405 SE Crossroads Drive, Suite G, Grimes, IA 50111		
Finance Budget Code:	328-815-6490	***Finance Project #***	
Vendor Project or Invoice #:		***PO #***	
Original Contract Date:	January 28, 2020	***Vendor #***	1243

Date of Council Meeting: November ~~24~~ 10, 2020 **PAYMENT REQUEST #** 8

PAYMENT PERIOD: From: October 5, 2020 Through: November 1, 2020

Contract Summary

Original Contract Amount:	$ 44,660.00			
Net change by Change Orders:	$ 20,000.00			
Contract Amount to Date: (line 1 ± 2)		$ 64,660.00		
Total completed and stored to date:	$ 56,721.43			
Retainage: 0 % of Completed Work:	$ -			
Total Earned less Retainage:		$ 56,721.43		
Less previous applications for payment:		$ 54,501.18		
SUBTOTAL			$	2,220.25
OTHER CHARGES (Attach an itemized list)				
CURRENT PAYMENT DUE			$	2,220.25
Balance to finish, including retainage:		$ 7,938.57		
Contract Time Remaining (If applicable)	-	WORKING DAYS		

The undersigned Contractor certifies that to the best of the Contractor's knowledge, information and belief the work covered by this Application for Payment has been completed in accordance with the Contract Documents, that all the amounts have been paid by the Contractor for work for which previous Certificate(s) for Payment were issued and payments received from the Owner, and that current payment shown herein is now due.

Construction Contractor Approval:

Firm Name

Signature Date

Engineer / Consultant Approval: Civil Design Advantage

Firm Name

Signature 11-4-2020 Date

City of Grimes Staff Approval:

Signature 11-4-20 Date

Submit to: *Matt Ahrens, P.E. - City Engineer - Engineering Department*

E-mail: Mahrens@Grimeslowa.gov *Phone:* *(515) 986-4050* *Fax:* *(515) 986-4480*

Date Printed: 11/4/2020

APPLICATION FOR PARTIAL PAYMENT OF CONTRACT

Previous Applications for Payment

No.	Date	Amount
1	March 10, 2020	$ 4,791.60
2	March 24, 2020	$ 15,669.00
3	April 28, 2020	$ 5,864.62
4	May 26, 2020	$ 12,283.11
5	June 23, 2020	$ 1,326.60
6	September 22, 2020	$ 8,200.00
7	October 13, 2020	$ 6,366.25
8		
9		
10		
11		
12		
13		
14		
15		
16		
17		
18		
19		
20		
21		
22		
23		
24		
25		
26		
27		
28		
29		
30		
31		
32		
33		
34		
35		

Previous Applications for Payment

No.	Date	Amount
36		
37		
38		
39		
40		
41		
42		
43		
44		
45		
46		
47		
48		
49		
50		
51		
52		
53		
54		
55		
56		
57		
58		
59		
60		
61		
62		
63		
64		
65		
66		
67		
68		
69		
70		

TOTAL $ 54,501.18

Record of Change Orders

No.	Date	Amount
1	October 27, 2020	$ 20,000.00
2		
3		
4		
5		
6		
7		
8		
9		
10		
11		
12		
13		
14		
15		
16		
17		
18		
19		
20		
21		
22		
23		
24		
25		

TOTAL $ 20,000.00

Contract Time Remaining

Contract Period:	WORKING DAYS
Original Contract Date:	January 28, 2020
Original Contract Time:	
Added by Change Order:	
Contract Time to Date:	-
Time Used to Date:	
Contract Time Remaining:	-

Date Printed: 11/4/2020

Invoice

Civil Design Advantage LLC
3405 SE Crossroads Drive Suite G
Grimes, Iowa 50111
(515) 369-4400

City of Grimes
Alex Pfaltzgraff
410 SE Main Street, Suite 102
Grimes, IA 50111

November 06, 2020
Project No: 2001.043
Invoice No: 31592

Project 2001.043 C. Grimes -WRA Sanitary Sewer Connection

Professional Services from October 05, 2020 through November 01, 2020

Task 106 Base Mapping

Total this Task **0.00**

Task 107 Gravity Sewer Service Area Analysis

Total this Task **0.00**

Task 201 Concept Planning

Total this Task **0.00**

Task 214 Force Main Alignment Alternatives

Total this Task **0.00**

Task 215 Typical Section

Total this Task **0.00**

Task 305 Acquisition Plat Preperation ($2475 ea)

Professional Personnel

	Hours	Rate	Amount	
Principal/Senior Engineer	2.00	180.00	360.00	
Principal/Senior Land Surveyor	5.50	180.00	990.00	
Technician 5	7.75	95.00	736.25	
Project Manager 6	1.00	134.00	134.00	
Total Labor				**2,220.25**

Total this Task **$2,220.25**

Task 501 Design Meetings

Total this Task **0.00**

Task 998 Permits & Fees

Total this Task **0.00**

Task 999 Reimbursable Expenses

Total this Task **0.00**

Billing Limits	**Current**	**Prior**	**To-Date**
Total Billings	2,220.25	58,938.40	61,158.65
Limit			64,660.00
Remaining			3,501.35

Project	2001.043	C. Grimes -WRA Sanitary Sewer Connection	Invoice	31592
		Total this Invoice		**$2,220.25**

Project Manager Gary Reed

EJCDC
ENGINEERS JOINT CONTRACT DOCUMENTS COMMITTEE

Contractor's Application for Payment No. 11 (Eleven)

Application Period: 10/1/2020 to 10/31/2020 **Application Date:** 10/31/2020

To (Owner):	City of Grimes, IA 101 NE Harvey Street, Grimes, Iowa 50111	**From (Contractor):**	Shank Constructors, Inc. 3501 85th Avenue North, Brooklyn Park, MN 55443	**Via (Engineer):**	McClure Engineering Co. 1360 NW 121st St, Clive, IA 50325
Owner's DWSRF Number:	FS-77-18-DWSRF-016	**Contractor's Contract Number:**	1300	**Engineer's Project Number:**	190904
Project:	City of Grimes, IA - Reverse Osmosis Water Treatment Plant - Phase 1	**Contract:**	Grimes RO WTP - Phase 1		

Application For Payment - Change Order Summary

Approved Change Orders

Number	Additions	Deductions
1	$ 37,166.00	
Totals:	$ 37,166.00	$ -
Net Change by Change Order:	$ 37,166.00	

1.	Original Contract Price			$	17,951,200.00
2.	Net change by Change Orders			$	37,166.00
3.	Current Contract Price (Line 1 ± 2)			$	17,988,366.00
4.	Total Completed and Stored to Date (Column F on Progress Estimate)			$	9,153,529.29
5.	Retainage				
a.	5.0% X $ 9,125,966.00	Work Completed		$	456,298.30
b.	5.0% X $ 27,563.29	Stored Material		$	1,378.16
c.	Early Release of Retainage			$	-
d.	Total Retainage (Line 5a + Line 5b - Line 5c)			$	457,676.46
6.	Amount Eligible to Date (Line 4 - Line 5d)			$	8,695,852.83
7.	Less Previous Payments (Line 6 from prior Application)			$	7,615,094.83
8.	Amount Due This Application			$	1,080,758.00
9.	Balance to Finish, Plus Retainage (Column G on Progress Estimate + Line 5 above)			$	9,292,513.17

Contractor's Certification

The undersigned Contractor certifies, to the best of its knowledge, the following:
(1) All previous progress payments received from Owner on account of Work done under the Contract have been applied on account to discharge Contractor's legitimate obligations incurred in connection with the Work covered by prior Applications for Payment;
(2) Title to all Work, materials and equipment incorporated in said Work, or otherwise listed in or covered by this Application for Payment, will pass to Owner at time of payment free and clear of all Liens, security interests, and encumbrances (except such as are covered by a bond acceptable to Owner indemnifying Owner against any such Liens, security interest, or encumbrances); and
(3) All the Work covered by this Application for Payment is in accordance with the Contract Documents and is not defective.

By: _____ Date: 10/29/2020

Payment of: $1,080,758.00
(Line 8 or other - attach explanation of the other amount)

is recommended by: _____ 11-2-20
(Engineer) (Date)

Payment of: _____
(Line 8 or other - attach explanation of the other amount)

is approved by: _____ _____
(Owner) (Date)

Approved by: _____ _____
Funding Agency (if applicable) (Date)

© 2013 National Society of Professional Engineers for EJCDC. All rights reserved.

Progress Estimate - Lump Sum Work

Contractor's Application

For (Contract):	Grimes RO WTP - Phase 1				Application Number:	11 (Eleven)		
Application Period:	10/1/2020	to	10/31/2020		Application Date:	10/31/2020		
	A	B	Work Completed C	D	E	F		G
Specification Section Number	Description	Scheduled Value ($)	From Previous Application (C+D)	This Period	Materials Presently Stored (not in C or D)	Total Completed and Stored to Date (C + D + E)	% (F/B)	Balance to Finish (B - F)
Division 01 - General Requirements								
01.01	Bonds & Insurance	$ 269,268.00	$ 269,268.00	$ -		$ 269,268.00	100.00%	$ -
01.02	General / Mobilization	$ 88,000.00	$ 88,000.00	$ -		$ 88,000.00	100.00%	$ -
01.03	Furnishings / Appliance / AV Equipment Allowance	$ 80,000.00	$ -	$ -		$ -	0.00%	$ 80,000.00
01.04	Submittal Software Allowance	$ 18,000.00	$ 9,000.00	$ -		$ 9,000.00	50.00%	$ 9,000.00
Division 02 - Existing Conditions								
02.01	Demolition - Process	$ 75,624.00	$ -	$ -		$ -	0.00%	$ 75,624.00
02.02	Demolition - Existing Site Fence	$ 7,800.00	$ 3,000.00	$ -		$ 3,000.00	38.46%	$ 4,800.00
Division 03 - Concrete								
03.01	Cast In Place Concrete / Reinforcement							
03.01.1	Spread Footings Office Area	$ 3,800.00	$ 3,800.00	$ -		$ 3,800.00	100.00%	$ -
03.01.2	Ribbon Footings Process Area	$ 96,250.00	$ 96,250.00	$ -		$ 96,250.00	100.00%	$ -
03.01.3	Ribbon Footings Office Area	$ 68,300.00	$ 68,300.00	$ -		$ 68,300.00	100.00%	$ -
03.01.4	Foundation Walls Process Area	$ 13,850.00	$ 13,850.00	$ -		$ 13,850.00	100.00%	$ -
03.01.5	Pipe Trench Mat Slabs	$ 179,240.00	$ 179,240.00	$ -		$ 179,240.00	100.00%	$ -
03.01.6	Pipe Trench Walls & Piers	$ 266,844.00	$ 266,844.00	$ -		$ 266,844.00	100.00%	$ -
03.01.7	Basement Mat Slab	$ 203,500.00	$ 203,500.00	$ -		$ 203,500.00	100.00%	$ -
03.01.8	Basement Walls & Columns	$ 234,450.00	$ 234,450.00	$ -		$ 234,450.00	100.00%	$ -
03.01.9	Phosphate/Ammonia Area Slabs	$ 29,462.00	$ 29,462.00	$ -		$ 29,462.00	100.00%	$ -
03.01.10	Phosphate/Ammonia Area Walls	$ 44,100.00	$ 44,100.00	$ -		$ 44,100.00	100.00%	$ -
03.01.11	Chlorine Room Slabs	$ 35,350.00	$ 35,350.00	$ -		$ 35,350.00	100.00%	$ -
03.01.12	Chlorine Room Walls	$ 40,050.00	$ 40,050.00	$ -		$ 40,050.00	100.00%	$ -
03.01.13	Flushing Box	$ 9,800.00	$ 9,800.00	$ -		$ 9,800.00	100.00%	$ -
03.01.14	Stoops	$ 14,440.00	$ 14,000.00	$ -		$ 14,000.00	96.95%	$ 440.00
03.01.15	Pump Room Elevated Slab	$ 222,350.00	$ 222,350.00	$ -		$ 222,350.00	100.00%	$ -
03.01.16	SOG East Process Area	$ 95,350.00	$ 25,000.00	$ 65,000.00		$ 90,000.00	94.39%	$ 5,350.00
03.01.17	SOG West Process Area	$ 29,200.00	$ 27,200.00	$ 2,000.00		$ 29,200.00	100.00%	$ -
03.01.18	SOG Office Area	$ 30,690.00	$ 3,000.00	$ 3,000.00		$ 6,000.00	19.55%	$ 24,690.00
03.01.19	Generator Pad	$ 49,070.00	$ 10,000.00	$ -		$ 10,000.00	20.38%	$ 39,070.00

© 2013 National Society of Professional Engineers for EJCDC. All rights reserved.

A		B	Work Completed C	Work Completed D	E	F		G
Specification Section Number	Description	Scheduled Value ($)	From Previous Application (C+D)	This Period	Materials Presently Stored (not in C or D)	Total Completed and Stored to Date (C + D + E)	% (F/B)	Balance to Finish (B - F)
03.01.20	Sign	$ 10,700.00	$ 1,000.00	$ -		$ 1,000.00	9.35%	$ 9,700.00
03.01.21	Misc Equipment Pads	$ 26,480.00	$ 2,500.00	$ 5,000.00		$ 7,500.00	28.32%	$ 18,980.00
03.01.22	Concrete Stair	$ 4,500.00	$ -	$ 1,500.00		$ 1,500.00	33.33%	$ 3,000.00
03.01.23	Precast Topping	$ 4,800.00	$ 4,800.00	$ -		$ 4,800.00	100.00%	$ -
03.02	Precast Concrete	$ 645,000.00	$ 640,500.00	$ -		$ 640,500.00	99.30%	$ 4,500.00
Division 04 - Masonry								
04.01	Masonry	$ 85,908.00	$ 80,000.00	$ -		$ 80,000.00	93.12%	$ 5,908.00
Division 05 - Metals								
05.01	Structural Steel & Misc Metal / Steel Joist - Decking / Stairs - Railings - Grating	$ 422,040.00	$ 336,000.00	$ -		$ 336,000.00	79.61%	$ 86,040.00
05.02	Metals & Precast Erection	$ 270,711.00	$ 194,000.00	$ 18,000.00		$ 212,000.00	78.31%	$ 58,711.00
Division 06 - Wood, Plastics, and Composites								
06.01	Rough Carpentry	$ 2,500.00	$ 1,500.00	$ 500.00		$ 2,000.00	80.00%	$ 500.00
Division 07 - Thermal and Moisture Protection								
07.01	Damp Proofing - Insulation	$ 17,245.00	$ 17,245.00	$ -		$ 17,245.00	100.00%	$ -
07.02	Roofing / Roofing Accessories	$ 281,900.00	$ 28,000.00	$ 220,000.00		$ 248,000.00	87.97%	$ 33,900.00
07.03	Sealants	$ 19,195.00	$ 10,000.00	$ 3,000.00		$ 13,000.00	67.73%	$ 6,195.00
Division 08 - Openings								
08.01	Doors / Frames / Hardware / Hatches							
08.01.1	Doors & Hardware	$ 64,500.00	$ 4,000.00	$ -		$ 4,000.00	6.20%	$ 60,500.00
08.01.2	Access Hatches	$ 2,500.00	$ 2,500.00	$ -		$ 2,500.00	100.00%	$ -
08.02	Overhead Coiling Doors	$ 52,000.00	$ -	$ -		$ -	0.00%	$ 52,000.00
08.03	Aluminum Entrance & Storefronts	$ 46,798.00	$ 4,140.00	$ -	$ 15,863.29	$ 20,003.29	42.74%	$ 26,794.71
08.04	Architectural Louvers	$ 46,521.00	$ -	$ 4,500.00		$ 4,500.00	9.67%	$ 42,021.00
Division 09 - Finishes								
09.01	Gypsum Board / Framing / Ceilings	$ 79,904.00	$ -	$ -		$ -	0.00%	$ 79,904.00
09.02	Floor Coverings	$ 30,600.00	$ -	$ -		$ -	0.00%	$ 30,600.00
09.03	Resinous Flooring	$ 102,050.00	$ -	$ -	$ 11,700.00	$ 11,700.00	11.46%	$ 90,350.00
09.04	Painting	$ 284,354.00	$ -	$ -		$ -	0.00%	$ 284,354.00
Division 10 - Specialties								
10.01	Signage	$ 10,776.00	$ -	$ -		$ -	0.00%	$ 10,776.00
10.02	Toilet Compartments & Accessories	$ 2,710.00	$ -	$ -		$ -	0.00%	$ 2,710.00
10.03	Shower Accessories	$ 2,580.00	$ -	$ -		$ -	0.00%	$ 2,580.00
10.04	Fire Extinguishers	$ 1,540.00	$ -	$ -		$ -	0.00%	$ 1,540.00
10.05	Lockers	$ 3,275.00	$ -	$ -		$ -	0.00%	$ 3,275.00

© 2013 National Society of Professional Engineers for EJCDC. All rights reserved.

A		B	Work Completed C	Work Completed D	E	F		G
Specification Section Number	Description	Scheduled Value ($)	From Previous Application (C+D)	This Period	Materials Presently Stored (not in C or D)	Total Completed and Stored to Date (C + D + E)	% (F/B)	Balance to Finish (B - F)
Division 12 - Furnishings								
12.01	Sunshades	$ 16,572.00	$ -	$ -		$ -	0.00%	$ 16,572.00
12.02	Window Shades	$ 2,555.00	$ -	$ -		$ -	0.00%	$ 2,555.00
12.03	Institutional Casework	$ 11,848.00	$ -	$ -		$ -	0.00%	$ 11,848.00
12.04	Lab Casework	$ 21,840.00	$ -	$ -		$ -	0.00%	$ 21,840.00
Division 21 - Fire Suppression								
21.01	Fire Protection	$ 143,575.00	$ 7,200.00	$ -		$ 7,200.00	5.01%	$ 136,375.00
Division 22 - Plumbing								
22.01	Plumbing / Fixtures / Equipment							
22.01.1	Process Air Piping & Compressor	$ 15,850.00	$ -	$ -		$ -	0.00%	$ 15,850.00
22.01.2	Basement Plumbing Underground	$ 58,788.00	$ 53,788.00	$ -		$ 53,788.00	91.49%	$ 5,000.00
22.01.3	Process Area Plumbing Underground	$ 86,105.00	$ 86,105.00	$ -		$ 86,105.00	100.00%	$ -
22.01.4	Office Area Plumbing Underground	$ 38,200.00	$ 30,000.00	$ -		$ 30,000.00	78.53%	$ 8,200.00
22.01.5	Heating Water Piping	$ 101,500.00	$ -	$ -		$ -	0.00%	$ 101,500.00
22.01.6	Condensate Piping	$ 7,500.00	$ -	$ -		$ -	0.00%	$ 7,500.00
22.01.7	Building VT & Drain Process Area	$ 38,500.00	$ -	$ 11,500.00		$ 11,500.00	29.87%	$ 27,000.00
22.01.8	Building VT & Drain Office Area	$ 38,500.00	$ -	$ 2,500.00		$ 2,500.00	6.49%	$ 36,000.00
22.01.9	Domestic Water Piping Office Area	$ 55,450.00	$ -	$ -		$ -	0.00%	$ 55,450.00
22.01.10	Domestic Water Piping Process Area	$ 33,280.00	$ -	$ -		$ -	0.00%	$ 33,280.00
22.01.11	Plumbing Fixtures	$ 18,500.00	$ 5,000.00	$ -		$ 5,000.00	27.03%	$ 13,500.00
22.01.12	Trench Drains	$ 30,050.00	$ 25,600.00	$ 4,450.00		$ 30,050.00	100.00%	$ -
22.01.13	Heating Equipment	$ 22,100.00	$ -	$ -		$ -	0.00%	$ 22,100.00
Division 23 - Heating, Ventilating, and Air Conditioning (HVAC)								
23.01	HVAC							
23.01.1	Preconstruction/Mobilization	$ 53,990.00	$ 50,200.00	$ 3,790.00		$ 53,990.00	100.00%	$ -
23.01.2	Shop Frabrication	$ 76,523.00	$ -	$ 20,000.00		$ 20,000.00	26.14%	$ 56,523.00
23.01.3	HVAC Install	$ 107,123.00	$ -	$ 17,500.00		$ 17,500.00	16.34%	$ 89,623.00
23.01.4	HVAC Equipment	$ 405,041.00	$ 225,000.00	$ 25,000.00		$ 250,000.00	61.72%	$ 155,041.00
23.01.5	HVAC Insulation	$ 3,796.00	$ -	$ -		$ -	0.00%	$ 3,796.00
23.01.6	Temperature Controls	$ 105,622.00	$ 16,000.00	$ -		$ 16,000.00	15.15%	$ 89,622.00
23.01.7	Test & Balance	$ 5,565.00	$ -	$ -		$ -	0.00%	$ 5,565.00
23.01.8	Commissioning	$ 19,740.00	$ -	$ -		$ -	0.00%	$ 19,740.00
23.01.9	Refrigeration Piping Modeling/Management	$ 15,522.00	$ -	$ -		$ -	0.00%	$ 15,522.00
23.01.10	Refrigeration Materials	$ 15,995.00	$ -	$ -		$ -	0.00%	$ 15,995.00
23.01.11	Refrigeration Labor	$ 20,755.00	$ -	$ -		$ -	0.00%	$ 20,755.00
23.02	Geothermal System	$ 196,069.00	$ 80,000.00	$ 88,500.00		$ 168,500.00	85.94%	$ 27,569.00

© 2013 National Society of Professional Engineers for EJCDC. All rights reserved.

A		B	Work Completed C	Work Completed D	E	F		G
Specification Section Number	Description	Scheduled Value ($)	From Previous Application (C+D)	This Period	Materials Presently Stored (not in C or D)	Total Completed and Stored to Date (C + D + E)	% (F/B)	Balance to Finish (B - F)
Division 25 - Integrated Automation								
25.01	Approved Design Submittals	$ 25,000.00	$ -	$ -		$ -	0.00%	$ 25,000.00
25.02	Control Panels	$ 225,000.00	$ -	$ -		$ -	0.00%	$ 225,000.00
25.03	Computer Equipment and Software	$ 160,000.00	$ -	$ -		$ -	0.00%	$ 160,000.00
25.04	System Programming	$ 35,000.00	$ -	$ -		$ -	0.00%	$ 35,000.00
25.05	Instrumentation	$ 14,500.00	$ -	$ -		$ -	0.00%	$ 14,500.00
25.06	On Site Start Up/Training	$ 21,000.00	$ -	$ -		$ -	0.00%	$ 21,000.00
Division 26 - Electrical								
26.01	Electrical	$ 1,188,553.00	$ 235,000.00	$ 64,000.00		$ 299,000.00	25.16%	$ 889,553.00
26.02	Electrical Gear - MCC's, Etc.	$ 528,000.00	$ -	$ -		$ -	0.00%	$ 528,000.00
26.03	Generator	$ 1,277,947.00	$ 65,000.00	$ -		$ 65,000.00	5.09%	$ 1,212,947.00
Division 27 - Communications								
27.01	Communication	$ 37,100.00	$ -	$ -		$ -	0.00%	$ 37,100.00
Division 28 - Electronic Safety and Security								
28.01	Electronic Safety and Security	$ 66,700.00	$ -	$ -		$ -	0.00%	$ 66,700.00
Division 31- Earthwork								
31.01	Mobilization	$ 40,000.00	$ 40,000.00	$ -		$ 40,000.00	100.00%	$ -
31.02	Construction Entrance	$ 2,250.00	$ 2,250.00	$ -		$ 2,250.00	100.00%	$ -
31.03	Strip, Stockpile & Respread Topsoil	$ 65,000.00	$ 26,000.00	$ -		$ 26,000.00	40.00%	$ 39,000.00
31.04	Site Excavating & Gracing, Cut to Fill	$ 85,000.00	$ 39,000.00	$ 25,000.00		$ 64,000.00	75.29%	$ 21,000.00
31.05	Over Excavation, Replace & Re-Compact of Building Pad Area 1	$ 329,000.00	$ 280,000.00	$ -		$ 280,000.00	85.11%	$ 49,000.00
31.06	Over Excavation & Replacement with Suitable Fill for Building Pad Area 2	$ 595,000.00	$ 595,000.00	$ -		$ 595,000.00	100.00%	$ -
31.07	Excavation of Pipe Gallery, Trench to Treatment Room & Trench in Treatment Room	$ 55,000.00	$ 55,000.00	$ -		$ 55,000.00	100.00%	$ -
31.08	Granular Backfill of Pipe Gallery, Trench to Treatment Room & Trench in Treatment Room	$ 200,000.00	$ 200,000.00	$ -		$ 200,000.00	100.00%	$ -
31.09	Provide & Place Granular Subbase for Building Pad	$ 54,179.00	$ 51,000.00	$ 2,500.00		$ 53,500.00	98.75%	$ 679.00
31.10	Silt Fence	$ 3,055.00	$ 3,055.00	$ -		$ 3,055.00	100.00%	$ -
31.11	Inlet Protection	$ 540.00	$ 540.00	$ -		$ 540.00	100.00%	$ -
Division 32- Exterior Improvements								
32.01	Seeding	$ 19,351.00	$ -	$ 2,000.00		$ 2,000.00	10.34%	$ 17,351.00

© 2013 National Society of Professional Engineers for EJCDC. All rights reserved.

A		B	Work Completed C	Work Completed D	E	F		G
Specification Section Number	Description	Scheduled Value ($)	From Previous Application (C+D)	This Period	Materials Presently Stored (not in C or D)	Total Completed and Stored to Date (C + D + E)	% (F/B)	Balance to Finish (B - F)
32.02	Plantings	$ 11,200.00	$ -	$ -		$ -	0.00%	$ 11,200.00
32.03	Sidewalks - Grading & Subgrade Prep	$ 3,310.00	$ -	$ -		$ -	0.00%	$ 3,310.00
32.04	Subgrade Prep for PCC Paving	$ 30,690.00	$ 7,500.00	$ 8,000.00		$ 15,500.00	50.51%	$ 15,190.00
32.05	PCC Subbase - 6"including fabric	$ 102,300.00	$ -	$ 60,000.00		$ 60,000.00	58.65%	$ 42,300.00
32.06	Site PCC Paving	$ 347,540.00	$ -	$ 148,000.00		$ 148,000.00	42.59%	$ 199,540.00
32.07	Gravel Shoulders	$ 2,660.00	$ -	$ -		$ -	0.00%	$ 2,660.00
32.08	Gravel Drives including Fabric	$ 33,660.00	$ -	$ -		$ -	0.00%	$ 33,660.00
32.09	Install Vinyl Coated Fence	$ 45,800.00	$ 20,000.00	$ -		$ 20,000.00	43.67%	$ 25,800.00
32.10	Install Slide Gate & Operator	$ 21,300.00	$ -	$ -		$ -	0.00%	$ 21,300.00
Division 33 - Utilities								
33.01	Site Utilities / Water - Sewer - Storm							
33.01.1	Site Utility Mobilization	$ 53,235.00	$ 53,235.00	$ -		$ 53,235.00	100.00%	$ -
33.01.2	Buildng Overflow Drain Pipe	$ 190,780.00	$ 190,780.00	$ -		$ 190,780.00	100.00%	$ -
33.01.3	Sanitary Sewer Pipe & Structures	$ 234,450.00	$ 234,450.00	$ -		$ 234,450.00	100.00%	$ -
33.01.4	Concentrate Pipe	$ 397,450.00	$ 364,500.00	$ -		$ 364,500.00	91.71%	$ 32,950.00
33.01.5	Perm Drain and Structure	$ 218,730.00	$ 218,730.00	$ -		$ 218,730.00	100.00%	$ -
33.01.6	RAW Piping	$ 54,900.00	$ 54,900.00	$ -		$ 54,900.00	100.00%	$ -
33.01.7	FW Piping	$ 470,720.00	$ 463,500.00	$ 2,500.00		$ 466,000.00	99.00%	$ 4,720.00
33.01.8	CE Piping	$ 206,380.00	$ 195,000.00	$ 6,500.00		$ 201,500.00	97.64%	$ 4,880.00
33.01.9	RCP Storm Drains	$ 73,500.00	$ 73,500.00	$ -		$ 73,500.00	100.00%	$ -
33.01.10	SD Piping	$ 28,330.00	$ 15,000.00	$ 7,500.00		$ 22,500.00	79.42%	$ 5,830.00
Division 40 - Process Interconnections								
40.01	Process Piping	$ 788,732.00	$ 215,000.00	$ 45,000.00		$ 260,000.00	32.96%	$ 528,732.00
40.02	Process Valves	$ 300,000.00	$ 60,000.00	$ -		$ 60,000.00	20.00%	$ 240,000.00
40.03	Process Controls	$ 38,500.00	$ -	$ -		$ -	0.00%	$ 38,500.00
40.04	WTP Disinfection	$ 10,000.00	$ -	$ -		$ -	0.00%	$ 10,000.00
Division 41 - Material Processing and Handling Equipment								
41.01	Monorail Hoist	$ 44,284.00	$ -	$ -		$ -	0.00%	$ 44,284.00
Division 43 - Process Gas and Liquid Handling, Purification and Storage Equipment								
43.01	End Suction Pumps	$ 22,000.00	$ -	$ 2,200.00		$ 2,200.00	10.00%	$ 19,800.00
43.02	Vertical Turbine Pumps	$ 285,000.00	$ 103,500.00	$ -		$ 103,500.00	36.32%	$ 181,500.00
Division 46 - Water and Wastewater Equipment								
46.01	Chemical Feed / Valves / Mixers	$ 407,871.00	$ -	$ 25,000.00		$ 25,000.00	6.13%	$ 382,871.00
46.02	Lime Feed Equipment	$ 442,500.00	$ 75,000.00	$ -		$ 75,000.00	16.95%	$ 367,500.00
46.03	Aerators	$ 77,629.00	$ 77,629.00	$ -	$ -	$ 77,629.00	100.00%	$ -

© 2013 National Society of Professional Engineers for EJCDC. All rights reserved.

A		B	Work Completed C	Work Completed D	E	F		G
Specification Section Number	Description	Scheduled Value ($)	From Previous Application (C+D)	This Period	Materials Presently Stored (not in C or D)	Total Completed and Stored to Date (C + D + E)	% (F/B)	Balance to Finish (B - F)
46.04	Harn RO System Assigned Contract Allowance	$ 1,327,752.00	$ 180,065.00	$ 210,000.00		$ 390,065.00	29.38%	$ 937,687.00
46.05	Equipment Install	$ 160,493.00	$ 5,000.00	$ -		$ 5,000.00	3.12%	$ 155,493.00
Approved Project Change Orders								
CO-001	Change Order #1	$ 37,166.00	$ -	$ 22,000.00		$ 22,000.00	59.19%	$ 15,166.00
	Total	$ 17,988,366.00	$ 8,000,026.00	$ 1,125,940.00	$ 27,563.29	$ 9,153,529.29	50.89%	$ 8,834,836.71

© 2013 National Society of Professional Engineers for EJCDC. All rights reserved.

Stored Material Summary

Contractor's Application

For (Contract):	Grimes RO WTP - Phase 1									Application Number:	11 (Eleven)	
Application Period:	10/1/2020		to		10/31/2020					Application Date:	10/31/2020	
A	B	C		D		E			F			G
				Stored Previously					Incorporated in Work			
Specification Section / Bid Item No.	Supplier Invoice Number	Description of Materials or Equipment Stored	Storage Location	Date Placed into Storage (Month/Year)	Amount ($)	Amount Stored this Month ($)	Subtotal Amount Completed and Stored to Date (D + E)		Date (Month/ Year)	Amount ($)		Materials Remaining in Storage ($) (D + E - F)
08.03	PA-1	Aluminum Door Materials	Supplier	Sep-2020	$ 15,863.29	$ -	$ 15,863.29					$ 15,863.29
09.03	PA-1	Flooring Materials	Supplier	Oct-2020	$ -	$ 11,700.00	$ 11,700.00					$ 11,700.00
46.03	77519	Force Draft Aerator	Site / Supplier	Jul-2020	$ 69,829.00		$ 69,829.00		Aug-2020	$ 69,829.00		$ -
		Totals			$ 85,692.29	$ 11,700.00	$ 97,392.29			$ 69,829.00		$ 27,563.29

© 2013 National Society of Professional Engineers for EJCDC. All rights reserved.

Partial Pay Estimates Paid-to-Date

Contractor's Application

For (Contract):	City of Grimes, IA - Reverse Osmosis Water Treatment Plant - Phase 1 Grimes RO WTP - Phase 1					Application Number:	11 (Eleven)
						Application Date:	10/31/2020
Application Period:	From:	10/1/2020	To:	10/31/2020	Contractor:	Shank Constructors, Inc. 3501 85th Avenue North, Brooklyn Park, MN 55443	

Original Contract Amount: $ 17,951,200.00

Approved Change Orders:

Number	Date	Amount
001	8/25/2020	$ 37,166.00

Revised Contract Amount: $ 17,988,366.00

Pay Estimates Paid-to-Date

Pay Estimate Number	Date	Amount
001	2/3/2020	$ 1,211,556.85
002	2/28/2020	$ 278,825.00
003	3/30/2020	$ 487,861.10
004	4/21/2020	$ 983,421.00
005	5/15/2020	$ 757,739.00
006	6/29/2020	$ 577,734.90
007	7/17/2020	$ 507,053.00
008	8/31/2020	$ 1,416,281.85
009	9/30/2020	$ 730,806.50
010	10/19/2020	$ 663,815.63
011		

Total Estimates Paid to Date: $ 7,615,094.83

Total Construction Cost: $ 7,615,094.83

McCLURE ENGINEERING CO.

EJCDC
ENGINEERS JOINT CONTRACT DOCUMENTS COMMITTEE

Contractor's Application for Payment No. 14

	Application Period: 9/26/2020 through 10/25/2020	Application Date: 10/28/2020
To (Owner): City of Grimes, 101 NE Harvey St., Grimes, IA 50111	From (Contractor): CB&I, PO Box 675084, Dallas, TX 75267-5084	Via (Engineer): McClure Engineering Co., 1360 NW 121st St., Clive, IA 50325
Project: New 1.5 MG Elevated Water Storage Tank	Contract:	
Owner's Contract No.: FS-77-18-DWSRF-016	Contractor's Project No.: 374231044	Engineer's Project No.: 191105-000

Application For Payment
Change Order Summary

Approved Change Orders		
Number	Additions	Deductions
TOTALS	$0.00	$0.00
NET CHANGE BY CHANGE ORDERS	$0.00	

1. ORIGINAL CONTRACT PRICE			$ $2,947,680.00
2. Net change by Change Orders			$ $0.00
3. Current Contract Price (Line 1 ± 2)			$ $2,947,680.00
4. TOTAL COMPLETED AND STORED TO DATE (Column F on Progress Estimate)			$ $2,633,549.00
5. RETAINAGE:			
a. 5% X	$2,633,549.00	Work Completed	$ $131,677.45
b. 5% X	$0.00	Stored Material	$ $0.00
c. Total Retainage (Line 5a + Line 5b)			$ $131,677.45
6. AMOUNT ELIGIBLE TO DATE (Line 4 - Line 5c)			$ $2,501,871.55
7. LESS PREVIOUS PAYMENTS (Line 6 from prior Application)			$ $2,401,377.94
8. AMOUNT DUE THIS APPLICATION			$ $100,493.61
9. BALANCE TO FINISH, PLUS RETAINAGE (Column G on Progress Estimate + Line 5 above)			$ $445,808.45

Contractor's Certification

The undersigned Contractor certifies that to the best of its knowledge: (1) all previous progress payments received from Owner on account of Work done under the Contract have been applied on account to discharge Contractor's legitimate obligations incurred in connection with Work covered by prior Applications for Payment; (2) title of all Work, materials and equipment incorporated in said Work or otherwise listed in or covered by this Application for Payment will pass to Owner at time of payment free and clear of all Liens, security interests and encumbrances (except such as are covered by a Bond acceptable to Owner indemnifying Owner against any such Liens, security interest or encumbrances); and (3) all Work covered by this Application for Payment is in accordance with the Contract Documents and is not defective.

and is not defective.

By: Heather Blume Date: 10/28/2020

Payment of: $ $100,493.61
(Line 8 or other - attach explanation of the other amount)

is recommended by: Matt Wahl — McClure Engineering Co. — 11-2-20 (Date)

Payment of: $ $100,493.61
(Line 8 or other - attach explanation of the other amount)

is approved by: _____ City of Grimes (Date)

Approved by: _____ Funding Agency (if applicable) (Date)

* ACCEPTANCE BY AGENCY: The review and acceptance of this estimate does not attest to the correctness of the quantities shown or that the work has been performed in accordance with the contract documents.

© 2010 National Society of Professional Engineers for EJCDC. All rights reserved.

Progress Estimate - Lump Sum Work

Contractor's Application

For (Contract): New 1.5 MG Elevated Water Storage Tank	Application Number: 14
Application Period: 9/26/2020 through 10/25/2020	Application Date: 10/28/2020

			Work Completed		E	F		G
A		B	C	D				
Specification Section No.	Description	Scheduled Value ($)	From Previous Application (C+D)	This Period	Materials Presently Stored (not in C or D)	Total Completed and Stored to Date (C + D + E)	% (F / B)	Balance to Finish (B - F)
1	Contract Award - Bonds & Insurance	$53,700.00	$53,700.00	$0.00	$0.00	$53,700.00	100%	$0.00
2	Engineering & Design	$203,600.00	$201,564.00	$0.00	$0.00	$201,564.00	99%	$2,036.00
3	Tank Material	$395,655.00	$375,872.25	$19,782.75	$0.00	$395,655.00	100%	$0.00
4	Fabrication & Ship (CET Crew)	$98,300.00	$98,300.00	$0.00	$0.00	$98,300.00	100%	$0.00
5	Fabrication & Ship (Tank Crew)	$168,500.00	$160,075.00	$8,425.00	$0.00	$168,500.00	100%	$0.00
6	Mobilization (Subcontractor)	$46,680.00	$46,680.00	$0.00	$0.00	$46,680.00	100%	$0.00
7	Site Prep	$46,320.00	$46,320.00	$0.00	$0.00	$46,320.00	100%	$0.00
8	Deep Foundation	$198,620.00	$198,620.00	$0.00	$0.00	$198,620.00	100%	$0.00
9	Foundation Construction	$440,000.00	$440,000.00	$0.00	$0.00	$440,000.00	100%	$0.00
10	Piping (at Grade & Burried)	$50,300.00	$37,725.00	$12,575.00	$0.00	$50,300.00	100%	$0.00
11	Mobilization (CB&I)	$69,700.00	$69,700.00	$0.00	$0.00	$69,700.00	100%	$0.00
12	Concrete Shaft Construction (CET Crew)	$448,200.00	$448,200.00	$0.00	$0.00	$448,200.00	100%	$0.00
13	Tank Erection	$183,200.00	$183,200.00	$0.00	$0.00	$183,200.00	100%	$0.00
14	Paint Tank (At Grade)	$120,000.00	$120,000.00	$0.00	$0.00	$120,000.00	100%	$0.00
15	Hoist Tank	$65,000.00	$0.00	$65,000.00	$0.00	$65,000.00	100%	$0.00
16	Paint Tank (In Air)	$136,600.00	$47,810.00	$0.00	$0.00	$47,810.00	35%	$88,790.00
17	Doors & Interior Build-out	$36,285.00	$0.00	$0.00	$0.00	$0.00	0%	$36,285.00
18	Electrical & Controls	$139,870.00	$0.00	$0.00	$0.00	$0.00	0%	$139,870.00
19	Sterilize & Fill	$3,500.00	$0.00	$0.00	$0.00	$0.00	0%	$3,500.00
20	Concrete Floor	$8,000.00	$0.00	$0.00	$0.00	$0.00	0%	$8,000.00
21	Final Site work (Fence/Landscape/Final Grading)	$35,650.00	$0.00	$0.00	$0.00	$0.00	0%	$35,650.00
	Totals	**$2,947,680.00**	**$2,527,766.25**	**$105,782.75**	**$0.00**	**$2,633,549.00**	**89%**	**$314,131.00**

© 2010 National Society of Professional Engineers for EJCDC. All rights reserved.

Stored Material Summary

Contractor's Application

For (Contract): New 1.5 MG Elevated Water Storage Tank

Application Number: 14

Application Period: 9/26/2020 through 10/25/2020

Application Date: 10/28/2020

A		B	C		D		E		F		G
					Stored Previously				Incorporated in Work		
Bid Item No.	Supplier Invoice No.	Submittal No. (with Specification Section No.)	Storage Location	Description of Materials or Equipment Stored	Date Placed into Storage (Month/Year)	Amount ($)	Amount Stored this Month ($)	Subtotal Amount Completed and Stored to Date (D + E)	Date (Month/ Year)	Amount ($)	Materials Remaining in Storage ($) (D + E - F)
								$0.00			$0.00
								$0.00			$0.00
								$0.00			$0.00
								$0.00			$0.00
								$0.00			$0.00
								$0.00			$0.00
								$0.00			$0.00
								$0.00			$0.00
								$0.00			$0.00
								$0.00			$0.00
								$0.00			$0.00
								$0.00			$0.00
								$0.00			$0.00
								$0.00			$0.00
								$0.00			$0.00
								$0.00			$0.00
								$0.00			$0.00
								$0.00			$0.00
								$0.00			$0.00
								$0.00			$0.00
								$0.00			$0.00
								$0.00			$0.00
								$0.00			$0.00
								$0.00			$0.00
								$0.00			$0.00
								$0.00			$0.00
								$0.00			$0.00
								$0.00			$0.00
								$0.00			$0.00
								$0.00			$0.00
								$0.00			$0.00
								$0.00			$0.00
								$0.00			$0.00
								$0.00			$0.00
								$0.00			$0.00
								$0.00			$0.00
								$0.00			$0.00
								$0.00			$0.00
								$0.00			$0.00
								$0.00			$0.00
								$0.00			$0.00
								$0.00			$0.00
								$0.00			$0.00
								$0.00			$0.00
								$0.00			$0.00
								$0.00			$0.00
								$0.00			$0.00
								$0.00			$0.00
								$0.00			$0.00
								$0.00			$0.00
								$0.00			$0.00
								$0.00			$0.00
				Totals		**$0.00**	**$0.00**	**$0.00**		**$0.00**	**$0.00**

© 2010 National Society of Professional Engineers for EJCDC. All rights reserved.

Partial Pay Estimates Paid-to-Date

Contractor's Application

For (Contract):	New 1.5 MG Elevated Water Storage Tank					**Application Number:**	14
						Application Date:	10/28/2020
Application Period:	From:	9/26/2020	To:	10/25/2020	**Contractor:**	CB&I Storage Tank Solutions LLC P.O. Box 675084, Dallas, TX 75267-5084	

Original Contract Amount: $ 2,947,680.00

Approved Change Orders:

Number	Date	Amount

Revised Contract Amount: $ 2,947,680.00

Pay Estimates Paid-to-Date

Pay Estimate Number	Date	Amount
001	6/17/2019	$ 123,146.60
002	7/15/2019	$ 102,343.50
003	8/19/2019	$ 254,457.50
004	10/15/2019	$ 94,335.00
005	12/3/2019	$ 288,108.40
006	2/3/2020	$ 110,987.55
007	2/19/2020	$ 77,204.89
008	5/18/2020	$ 222,347.59
009	6/15/2020	$ 98,255.22
010	7/20/2020	$ 408,557.19
011	8/17/2020	$ 279,415.86
012	9/14/2020	$ 156,693.14
013	10/19/2020	$ 185,525.50
014	10/28/2020	$ 100,493.61

Total Estimates Paid to Date: $ 2,501,871.55

Total Construction Cost: $ 2,501,871.55

McCLURE ENGINEERING CO.

CB&I LLC (SPS Division)

915 N. Eldridge Parkway, Floor 13
Houston, TX 77079

INVOICE

INVOICE NO.	231044-14
APPLICATION NO.	14
INVOICE DATE	10/28/20
DUE DATE	11/27/20
TERMS	N30
A/P VENDOR NO.	#

MAIL TO:	SOLD TO:
City of Grimes 101 NE Harvey Street Grimer, IA 50111 Attn: Dan Wing Ph. 515-971-3859 Email: dwing@mecresults.com	City of Grimes 101 NE Harvey Street Grimer, IA 50111
Job Location:	Grimes, IA
Eng Proj #:	191105-000

Work From Date:	09/26/20
Work Thru Date:	10/25/20
CBI Contract No.	374231044
CBI Customer No.	9503157
Project Manager	Drew Rockafellow

DESCRIPTION
New 1.5 MG Elevated Water Storage Tank

Original Contract Price	**$2,947,680.00**
Change Order	**$0.00**
Total Contract Price	**$2,947,680.00**

	Schedule of Values	PRICE	% COMPLETE	AMOUNT DUE
1	Contract Award - Bonds & Insurance	$53,700.00	100%	$53,700.00
2	Engineering & Design	$203,600.00	99%	$201,564.00
3	Tank Material	$395,655.00	100%	$395,655.00
4	Fabrication & Ship (CET Crew)	$98,300.00	100%	$98,300.00
5	Fabrication & Ship (Tank Crew)	$168,500.00	100%	$168,500.00
6	Mobilization (Subcontractor)	$46,680.00	100%	$46,680.00
7	Site Prep	$46,320.00	100%	$46,320.00
8	Deep Foundation	$198,620.00	100%	$198,620.00
9	Foundation Construction	$440,000.00	100%	$440,000.00
10	Piping (at Grade & Burried)	$50,300.00	100%	$50,300.00
11	Mobilization (CB&I)	$69,700.00	100%	$69,700.00
12	Concrete Shaft Construction (CET Crew)	$448,200.00	100%	$448,200.00
13	Tank Erection	$183,200.00	100%	$183,200.00
14	Paint Tank (At Grade)	$120,000.00	100%	$120,000.00
15	Hoist Tank	$65,000.00	100%	$65,000.00
16	Paint Tank (In Air)	$136,600.00	35%	$47,810.00
17	Doors & Interior Build-out	$36,285.00	0%	$0.00
18	Electrical & Controls	$139,870.00	0%	$0.00
19	Sterilize & Fill	$3,500.00	0%	$0.00
20	Concrete Floor	$8,000.00	0%	$0.00
21	Final Site work (Fence/Landscape/Final Grading)	$35,650.00	0%	$0.00
		$2,947,680.00	89%	$2,633,549.00

Total Completed to Date	$2,633,549.00
Less: Retention 5%	$131,677.45
Total Amount Billed to Date	$2,501,871.55
Less: Amount Previously Invoiced	$2,401,377.94
Current Amount Due	$100,493.61

Regular Mail:
CB&I STORAGE TANK SOLUTIONS LLC
P.O. Box 675084
Dallas, TX 75267-5084

Overnight Mail:
BMO Harris Bank
Attn: Conduent Processing Lockbox 675084
12720 Hillcrest Road / Suite #115
Dallas, TX 75230

ACH or WIRE:
Account Name: CB&I Storage Tank Solutions LLC
Bank: Harris Bank
ABA No.: 071000288
SWIFT Code: HATRUS44XXX
Location: 111 West Monroe Street, Chicago, IL. 60603
Account: 2073252

DIRECT QUESTIONS REGARDING: usainvoicing@mcdermott.com

RESOLUTION APPROVING PAYMENT OF RETAINAGE

Grimes Resolution No. 11-0320

WHEREAS, All Terrain Seeding (ATS) has completed contract work on the Little Beaver & Prairie Creek Channel Improvements Project (Project); and

WHEREAS, Iowa law required that a retainage be held after the completion of the contract so that claims could be made against the retainage, and that claims were received; and

WHEREAS, the claims that were made against the retainage have been discussed with ATS and the parties making the claims, and an agreement was reached as to an acceptable distribution; and

NOW, THEREFORE, IT IS HEREBY RESOLVED by the City Council of the City of Grimes, Iowa that the contract retainage of $39,738.84 be paid as follows:

1. Schildberg Construction Inc. will receive a check made payable to it in the amount of $30.749.61 in satisfaction of any claim on this Project.
2. First Bank of Lynnville will receive a check payable to it for $8,989.23 in release of any claim on this Project.

Passed by the City Council of the City of Grimes, Iowa, by a vote of ___to___ this 10th day of November, 2020, and approved this 10th day of November, 2020.

_____

Scott Mikkelsen, Mayor

Attested:

_____

Rochelle Williams, City Clerk

Schildberg Construction

3839 Merle Hay Road #231

Des Moines, Iowa 50310

Attn: Blane Martin

$30,749.61 (will pick at city hall on Thurs November 12, 2020

First Bank of Lynnville

413 East Street

Lynnville, Iowa 50153

Zachary Guinn

$8,989.23

Metro
Home Improvement Program

Program Administered by:

Community & Economic
Development Department
City of West Des Moines
4200 Mills Civic Parkway
P.O. Box 65320
West Des Moines, Iowa 50265-0320

Phone 515-273-0770
FAX 515-222-3640

www.wdm.iowa.gov
housing@wdm.iowa.gov

Participating Cities

ALTOONA

city of Ankeny
bringing it all together

The City of Bondurant
on the move — IOWA

CITY OF GRIMES

POLK CITY

UNIQUELY URBANDALE

THE CITY OF WEST DES MOINES

Windsor Heights
the heart of it all

October 26, 2020

Mayor Scott Mikkelsen
City of Grimes
101 NE Harvey Street
Grimes, IA 50111

RE: Metro Home Improvement Program Invoice for 2020-21 FY & Budget Amount for 2021-22 FY

Dear Mayor Scott Mikkelsen:

Enclosed is the invoice for your city's contribution to the Metro Home Improvement Program 2020-21 Fiscal Year. The total invoice is $27,969.00 for the annual administration fee and program match dollars.

Currently, the waiting list in each city is:

Altoona	0	Polk City	0
Ankeny	7	Urbandale	4
Bondurant	3	West Des Moines	14
Grimes	0	Windsor Heights	0

As you can see from the numbers above, some of the cities do not have a waiting list and other lists are relatively small. This is a great time to get the word out about the program for 2021 funding. I would be happy to assist with that effort. Please contact me if you would like any assistance in getting the word out in your community.

For the 2021-22 fiscal year, the budget amount for this program will be $8,208.00 for the annual administration fee.

If you have any questions about the invoice or the status of the program, please contact me at (515) 273-0770.

Respectively,

Christine Gordon

Christine Gordon
Housing Planner

Enclosure

REC'D OCT 29 2020

THE CITY OF
West Des Moines.

INVOICE

CITY OF GRIMES
101 N HARVEY

GRIMES, IA 50111

Billing Date	10/26/2020
Due Date	**Upon Receipt**
Invoice Number	CE - 2021-00010035
Total Due	$27,969.00

Description: Metro Home Improvement Program
Comments: Annual City Contribution -- Metro Home Improvement Program FY20-21

Description	Quantity	Unit Price	Total Price
CE Billing	1	$27,969.0000	$27,969.00

Invoice Total:	$27,969.00
Prepaid Amount:	($0.00)
Balance Due:	$27,969.00

Customer #	Billing Date	Due Date	Invoice Number	Total Due
46	10/26/2020	Upon Receipt	CE - 2021-00010035	$27,969.00

Please include the Invoice Number on your check.

Billing Questions? Please Contact: Christine Gordon (515)273-0770 christine.gordon@wdm.iowa.gov	**Make Payment to:** City of West Des Moines Attn: Accounts Receivable P.O. Box 65320 West Des Moines, IA 50265-0320

Tax ID #42-6005359

COMMERCIAL APPRAISERS OF IOWA, INC.

Real Estate Valuation & Consulting

Patrick J. Schulte, MAI
Russ G. Manternach, MAI

Levi H. Freedman, MAI
Karen C. Olson, MAI
David J. Fuglsang, MAI
Luke J. Wanninger, MAI

October 26, 2020

Mr. Alex Pfaltzgraff, AICP, CFM
Development Services Director
City of Grimes
410 SE Main Street, Suite 102
Grimes, IA 50111

Re: WRA Trunk Sewer Extension Project.

Appraisal of Koethe Parcel Located along Meadow Drive, Grimes, Iowa.
Appraisal of Shawhan Parcel Located at 400 NW 23rd Court, Grimes, Iowa.
Appraisal of Dallas Center-Grimes School Parcel Located at 2555 West 1st Street, Grimes, Iowa.
Appraisal of HD, LLC Parcel Located along NW 142nd Street, Grimes, Iowa.
Appraisal of Urfer Parcel Located at 23391 Y Avenue, Grimes, Iowa.
Appraisal of Petersen Parcel Located along 156th Street, Grimes, Iowa.
Appraisal of Cideal Farms, LLC Parcel Located along 230th Street, Grimes, Iowa.

Total Fee (7 appraisals at $2,500/appraisal) **$17,500.**

Due Upon Receipt
Tax I.D. # 42-1516283
File #5962

Please Return the Bottom Portion of this Invoice with Your Payment to:

COMMERCIAL APPRAISERS OF IOWA, INC.

Thank you.

Re: WRA Trunk Sewer Extension Project.

Total Fee **$17,500.**

File #5962

3737 Woodland Avenue • Suite 320 • West Des Moines, Iowa 50266
Phone 515/288-6800 • Fax 515/288-6810

P.O. No. _____

28287

CITY OF GRIMES

101 N. Harvey, Grimes, IA 50111 phone: 515-986-3036 fax: 515-986-3846

PURCHASE REQUEST/PURCHASE ORDER

Source/Supplier Commercial Appraisals of Iowa, Inc.
Name

3737 Woodland Ave. Ste 320, WDM, IA 50266
Address

(515) 288-6800
Phone Number/Fax Number

ITEMS	QTY	UNIT PRICE	TOTAL
Appraisals			$17,500

PURCHASE JUSTIFICATION: _____

DEPARTMENT: Development Services

LINE ITEM: 328-815-6490

BEGINNING BUDGET BALANCE: _____

ENDING BUDGET BALANCE: _____

PURCHASE REQUESTED BY: Alex Pfaltzgraff RBY DATE: October 27, 2020

PURCHASE ORDER APPROVAL AND ASSIGNMENT

_____ _____
City Administrator Date

_____
Council Approval date: (if over $5,000)

☐ Purchaser's Copy ☐ Vendor's Copy ☐ File Copy

CITY OF GRIMES

101 NE Harvey, Grimes, Iowa 50111
515.986.3036 Fax 515.986.3846

AGENDA MEMO

For Meeting of November 10, 2020

AGENDA HEADING: Resolution Approving Consent and Agreement for Improvements within overland flowage easement for Brentwood Estates Lot 67.

SYNOPSIS: The owner of 2912 NE Cherry Court has requested approval to install a fence within the overland flowage easement on the subject property. The installation of the fence has been reviewed by city staff and it has been determined that the installation will not affect the city's ability to maintain the overland flowage easement.

FISCAL IMPACT:
N/A

PREVIOUS COUNCIL ACTION(S):
Approve overland flowage easement for Brentwood Estates

BOARD/COMMISSION ACTION(S):
N/A

STAFF/COMMITTEE RECOMMENDATION:
Staff recommends approval of the Resolution Approving Consent and Agreement for Improvements within overland flowage easement for Brentwood Estates Lot 67.

RESOLUTION NO. _____

RESOLUTION APPROVING
CONSENT AND AGREEMENT FOR IMPROVEMENTS WITHIN OVERLAND FLOWAGE EASEMENT FOR
LOT 67 IN BRENTWOOD ESTATES
2912 NE CHERRY COURT

WHEREAS, the owners of Lot 67 in Brentwood Estates in the City of Grimes, Iowa (the "Property") have submitted to the City of Grimes a Consent and Agreement for Improvements within overland flowage easement to permit the installation of a fence within the easement area on the Property; and

WHEREAS, City desires to accept the Consent and Agreement for Improvements within overland flowage easement.

NOW, THEREFORE, BE IT RESOLVED BY THE CITY COUNCIL OF THE CITY OF GRIMES, IOWA:

That the Consent and Agreement for Improvements within overland flowage easement ("Consent and Agreement") regarding Lot 67, Brentwood Estates, is hereby accepted and approved by the City Council of the City of Grimes, that the Mayor is hereby authorized to execute such Consent and Agreement on behalf of the City, and the City Clerk to attest to his signature, and that the City Clerk is hereby authorized and directed to file the Consent and Agreement with the Polk County Recorder.

PASSED AND APPROVED this ____ day of _____, 20__.

By: _____
Scott Mikkelsen, Mayor

ATTEST:

_____
Rochelle Williams, City Clerk

EXHIBIT A

EASEMENT AREA

A 6' decorative iron fence has been proposed to be constructed in an overland flowage easement on Lot 67 of Brentwood Estates (2912 NE Cherry Court) in accordance to permit number FN-20-06914.

Preparer Information: Alex Pfaltzgraff, 101 NE Harvey St, Grimes, Iowa 50111 Phone (515) 986-3036
Taxpayer Information: City of Grimes 505 NE Harvey Street, Grimes, IA 50111 (515) 986-3036
Return to: Rochelle Williams, City Clerk, City of Grimes, 101 NE Harvey St, Grimes, Iowa 50111

CONSENT AND AGREEMENT FOR IMPROVEMENTS

This CONSENT AND AGREEMENT FOR IMPROVEMENTS ("Agreement") is entered into by and between Michelle and Nick Menough (collectively, the "Property Owners") and the City of Grimes, Iowa, a municipal corporation (hereinafter called "City"):

1. PROPERTY DESCRIPTION. Property Owners own that property legally described as:

   Lot 67 of Brentwood Estates (2912 NE Cherry Court), an Official Plat, now included in and forming a part of the City of Grimes, Polk County, Iowa ("Property").

2. EXISTING EASEMENT. The Property Owner or Property Owner's predecessor in title, granted that certain overland flowage easement, dated May 8, 2018 recorded on June 20, 2018, in Book 16970, Page 562, in the real property records of Polk County, Iowa (the "Easement") to the City, which prohibited the erection of any fence or other structure within the easement areas described therein (the "Easement Area") without the prior written consent of the City.

3. IMPROVEMENTS. The Property Owners desire to install a fence on the Property, the exact nature and scope of which is described on Exhibit A, attached hereto and incorporated herein (the "Improvement"), which encroaches into the Easement Area, and the City has agreed to consent to the installation of the Improvement within the Easement Area, subject to the conditions set forth in this Agreement.

4. CITY CONSENT TO INSTALLATION OF IMPROVEMENTS. The City hereby consents to the installation of the Improvement as described herein within the Easement Area, provided that the Property Owners install and maintain the Improvement such that the Improvement does not impede the use and enjoyment of the Easement Area by the City as outlined in the Easement. Notwithstanding the foregoing, the Property shall

obtain all necessary licenses and approvals for the installation of the Improvement pursuant to City Ordinances.

5. MAINTENANCE AND LIABILITY. The Property Owners acknowledge and agree that in the event that the City exercises its rights under the Easement, including the rights to construct, reconstruct, repair, replace, enlarge, inspect and maintain the Improvement, the City's duty of restoration for the Easement Area shall be limited to grading and one seeding grass. In no event shall the City shall be responsible for any reconstruction, replacement, repair or maintenance of the fence or any improvements or structure located within the Easement Area, as the result of any activity, including, but not limited to, damage or destruction of the Property Owners' improvement by the City, City Employees, or City Contractors in connection with work in the Easement Area. Except as a result of the gross negligence or intentional misconduct of the City or City Employees, the Property Owners shall indemnify, defend and hold harmless the City from and against any loss or damage to the Property or liability from any claim by the Property Owners or any third party by reason of the construction, installation, use or maintenance of the Improvements.

6. NO OTHER CHANGE. Except as amended herein, each and every term, condition, warranty and provision of the Easement shall remain in full force and effect, and such are hereby ratified, confirmed and approved by the parties hereto.

7. TERMINATION. If the Improvement is destroyed or removed and not replaced with an identical structure to the one defined by Exhibit A within three months, or if the Improvement is replaced with a different structure which is not authorized by the City, this Agreement shall automatically terminate, and the City may file notice of the termination in the records of the Office of the County Recorder. Failure by the City to file such notice shall not be interpreted as approval or further consent by the City, and shall not impact the validity of the termination.

8. RUNS WITH THE LAND. This Agreement shall be deemed to run with the land and shall be binding on the Property Owners and on the Property Owners' heirs, successors and assigns.

9. APPROVAL BY CITY COUNCIL. This Agreement shall not be binding until it has received the final approval and acceptance by the City Council by Resolution which approval and acceptance shall be noted on this Agreement by the City Clerk.

The Property Owners do HEREBY COVENANT with the City that (i) the Property Owners hold said real estate described in this Agreement by title in fee simple; (ii) that the Property Owners have good and lawful authority to convey the same; and (iii) the Property Owners covenant to WARRANT AND DEFEND the said premises against the claims of all persons whomsoever.

Words and phrases herein, including acknowledgment hereof, shall be construed as in the singular or plural number, and as masculine or feminine gender, according to the context.

Signed this 16 day of Oct, 2020

PROPERTY OWNERS

Michelle Menough

Michelle Menough

Nick Menough

Nick Menough

STATE OF IOWA)
) SS
COUNTY OF Polk)

On this 16 day of October, 2020, before me, the undersigned, a Notary Public in and for the State of Iowa, personally appeared Michelle Menough, to me known to be the identical person named in and who executed the foregoing instrument, and acknowledged that the person executed the instrument as the voluntary act of the person.

NOTARIAL SEAL IOWA
RACHEL B GREVING
Commission Number 816624
My Commission Expires
April 26, 2022

Rachel Gig

Notary Public in and for the
State of Iowa

My Commission expires Apr. 26, 2022

STATE OF IOWA)
) SS
COUNTY OF Polk)

On this 16 day of October, 2020, before me, the undersigned, a Notary Public in and for the State of Iowa, personally appeared Nick Menough, to me known to be the identical person named in and who executed the foregoing instrument, and acknowledged that these persons executed the instrument as the voluntary acts of the persons.

NOTARIAL SEAL IOWA
RACHEL B GREVING
Commission Number 816624
My Commission Expires
April 26, 2022

Rachel Gig

Notary Public in and for the
State of Iowa

My Commission expires Apr. 26, 2022

CITY OF GRIMES

By: _____
Scott Mikkelsen, Mayor

Attest:

_____
Rochelle Williams
City Clerk

STATE OF IOWA)
) SS
COUNTY OF POLK)

On this ____ day of _____, 20__, before me, the undersigned, a Notary Public in and for the State of Iowa, personally appeared Scott Mikkelsen and Rochelle Williams, to me personally known, and, who, being by me duly sworn, did say that they are the Mayor and the City Clerk, respectively, of the City of Grimes, Iowa; that the seal affixed to the foregoing instrument is the corporate seal of the corporation, and that the instrument was signed and sealed on behalf of the corporation, by authority of its City Council, as contained in Resolution No. _____ adopted by the City Council, under Roll Call of the City Council on the ____ day of _____, 20__, and that Scott Mikkelsen and Rochelle Williams acknowledged the execution of the instrument to be their voluntary act and deed and the voluntary act and deed of the corporation, by it voluntarily executed.

_____
Notary Public in and for the
State of Iowa

My Commission expires _____

CITY OF GRIMES

101 NE Harvey, Grimes, Iowa 50111
515.986.3036 Fax 515.986.3846

AGENDA MEMO

For Meeting of November 10, 2020

AGENDA HEADING: Resolution Approving Consent and Agreement for Improvements within overland flowage easement for Beaverbrooke West Plat Eight Lot 92.

SYNOPSIS: The owner of 1704 NW Sunset Lane has requested approval to install a fence within the overland flowage easement on the subject property. The installation of the fence has been reviewed by city staff and it has been determined that the installation will not affect the city's ability to maintain the overland flowage easement.

FISCAL IMPACT:
N/A

PREVIOUS COUNCIL ACTION(S):
Approve overland flowage easement for Beaverbrooke West Plat Eight

BOARD/COMMISSION ACTION(S):
N/A

STAFF/COMMITTEE RECOMMENDATION:
Staff recommends approval of the Resolution Approving Consent and Agreement for Improvements within overland flowage easement for Beaverbrooke West Plat Eight Lot 92.

RESOLUTION NO. _____

RESOLUTION APPROVING
CONSENT AND AGREEMENT FOR IMPROVEMENTS WITHIN OVERLAND FLOWAGE EASEMENT FOR
LOT 92 IN BEAVERBROOKE WEST PLAT EIGHT
1704 NW SUNSET LANE

WHEREAS, the owners of Lot 92 in Beaverbrooke West Plat Eight in the City of Grimes, Iowa (the "Property") have submitted to the City of Grimes a Consent and Agreement for Improvements within overland flowage easement to permit the installation of a fence within the easement area on the Property; and

WHEREAS, City desires to accept the Consent and Agreement for Improvements within overland flowage easement.

NOW, THEREFORE, BE IT RESOLVED BY THE CITY COUNCIL OF THE CITY OF GRIMES, IOWA:

That the Consent and Agreement for Improvements within overland flowage easement ("Consent and Agreement") regarding Lot 92, Beaverbrooke West Plat Eight, is hereby accepted and approved by the City Council of the City of Grimes, that the Mayor is hereby authorized to execute such Consent and Agreement on behalf of the City, and the City Clerk to attest to his signature, and that the City Clerk is hereby authorized and directed to file the Consent and Agreement with the Polk County Recorder.

PASSED AND APPROVED this ____ day of _____, 20__.

By: _____
Scott Mikkelsen, Mayor

ATTEST:

_____
Rochelle Williams, City Clerk

EXHIBIT A

EASEMENT AREA

A 42" black chainlink fence has been proposed to be constructed in an overland flowage easement on Lot 92 of Beaverbrooke West Plat Eight (1704 NW Sunset Lane) in accordance to permit number FN-20-06849.

Preparer Information: Alex Pfaltzgraff, 101 NE Harvey St, Grimes, Iowa 50111 Phone (515) 986-3036
Taxpayer Information: City of Grimes 505 NE Harvey Street, Grimes, IA 50111 (515) 986-3036
Return to: Rochelle Williams, City Clerk, City of Grimes, 101 NE Harvey St, Grimes, Iowa 50111

CONSENT AND AGREEMENT FOR IMPROVEMENTS

This CONSENT AND AGREEMENT FOR IMPROVEMENTS ("Agreement") is entered into by and between Louis Hanson (collectively, the "Property Owners") and the City of Grimes, Iowa, a municipal corporation (hereinafter called "City"):

1. PROPERTY DESCRIPTION. Property Owners own that property legally described as:

   Lot 92 of Beaverbrooke West Plat Eight (1704 SW Sunset Lane), an Official Plat, now included in and forming a part of the City of Grimes, Polk County, Iowa ("Property").

2. EXISTING EASEMENT. The Property Owner or Property Owner's predecessor in title, granted that certain overland flowage easement, dated September 24, 2013 recorded on October 17, 2013, in Book 14996, Page 903, in the real property records of Polk County, Iowa (the "Easement") to the City, which prohibited the erection of any fence or other structure within the easement areas described therein (the "Easement Area") without the prior written consent of the City.

3. IMPROVEMENTS. The Property Owners desire to install a fence on the Property, the exact nature and scope of which is described on Exhibit A, attached hereto and incorporated herein (the "Improvement"), which encroaches into the Easement Area, and the City has agreed to consent to the installation of the Improvement within the Easement Area, subject to the conditions set forth in this Agreement.

4. CITY CONSENT TO INSTALLATION OF IMPROVEMENTS. The City hereby consents to the installation of the Improvement as described herein within the Easement Area, provided that the Property Owners install and maintain the Improvement such that the Improvement does not impede the use and enjoyment of the Easement Area by the City as outlined in the Easement. Notwithstanding the foregoing, the Property shall

obtain all necessary licenses and approvals for the installation of the Improvement pursuant to City Ordinances.

5. MAINTENANCE AND LIABILITY. The Property Owners acknowledge and agree that in the event that the City exercises its rights under the Easement, including the rights to construct, reconstruct, repair, replace, enlarge, inspect and maintain the Improvement, the City's duty of restoration for the Easement Area shall be limited to grading and one seeding grass. In no event shall the City shall be responsible for any reconstruction, replacement, repair or maintenance of the fence or any improvements or structure located within the Easement Area, as the result of any activity, including, but not limited to, damage or destruction of the Property Owners' improvement by the City, City Employees, or City Contractors in connection with work in the Easement Area. Except as a result of the gross negligence or intentional misconduct of the City or City Employees, the Property Owners shall indemnify, defend and hold harmless the City from and against any loss or damage to the Property or liability from any claim by the Property Owners or any third party by reason of the construction, installation, use or maintenance of the Improvements.

6. NO OTHER CHANGE. Except as amended herein, each and every term, condition, warranty and provision of the Easement shall remain in full force and effect, and such are hereby ratified, confirmed and approved by the parties hereto.

7. TERMINATION. If the Improvement is destroyed or removed and not replaced with an identical structure to the one defined by Exhibit A within three months, or if the Improvement is replaced with a different structure which is not authorized by the City, this Agreement shall automatically terminate, and the City may file notice of the termination in the records of the Office of the County Recorder. Failure by the City to file such notice shall not be interpreted as approval or further consent by the City, and shall not impact the validity of the termination.

8. RUNS WITH THE LAND. This Agreement shall be deemed to run with the land and shall be binding on the Property Owners and on the Property Owners' heirs, successors and assigns.

9. APPROVAL BY CITY COUNCIL. This Agreement shall not be binding until it has received the final approval and acceptance by the City Council by Resolution which approval and acceptance shall be noted on this Agreement by the City Clerk.

The Property Owners do HEREBY COVENANT with the City that (i) the Property Owners hold said real estate described in this Agreement by title in fee simple; (ii) that the Property Owners have good and lawful authority to convey the same; and (iii) the Property Owners covenant to WARRANT AND DEFEND the said premises against the claims of all persons whomsoever.

Words and phrases herein, including acknowledgment hereof, shall be construed as in the singular or plural number, and as masculine or feminine gender, according to the context.

Signed this 27 day of October, 2020

PROPERTY OWNERS

Louis Hanson

STATE OF IOWA)
) SS
COUNTY OF Polk)

On this 27 day of October, 2020, before me, the undersigned, a Notary Public in and for the State of Iowa, personally appeared Louis Hanson, to me known to be the identical person named in and who executed the foregoing instrument, and acknowledged that these persons executed the instrument as the voluntary acts of the persons.

Rachel Greving

Notary Public in and for the
State of Iowa

NOTARIAL SEAL IOWA

RACHEL B GREVING
Commission Number 816624
My Commission Expires
April 26, 2022

My Commission expires Apr. 26, 2022

CITY OF GRIMES

By: _____
Scott Mikkelsen, Mayor

Attest:

_____
Rochelle Williams
City Clerk

STATE OF IOWA)
) SS
COUNTY OF POLK)

On this ____ day of _____, 20__, before me, the undersigned, a Notary Public in and for the State of Iowa, personally appeared Scott Mikkelsen and Rochelle Williams, to me personally known, and, who, being by me duly sworn, did say that they are the Mayor and the City Clerk, respectively, of the City of Grimes, Iowa; that the seal affixed to the foregoing instrument is the corporate seal of the corporation, and that the instrument was signed and sealed on behalf of the corporation, by authority of its City Council, as contained in Resolution No. _____ adopted by the City Council, under Roll Call of the City Council on the ____ day of _____, 20__, and that Scott Mikkelsen and Rochelle Williams acknowledged the execution of the instrument to be their voluntary act and deed and the voluntary act and deed of the corporation, by it voluntarily executed.

_____
Notary Public in and for the
State of Iowa

My Commission expires _____

CITY OF GRIMES

101 NE Harvey, Grimes, Iowa 50111
515.986.3036 Fax 515.986.3846

AGENDA MEMO

For Meeting of November 10, 2020

AGENDA HEADING: Resolution Approving Consent and Agreement for Improvements within overland flowage easement for Heritage at Grimes Plat 6 Lot 3.

SYNOPSIS: The owner of 2200 NE Little Beaver Drive has requested approval to install a fence within the overland flowage easement on the subject property. The installation of the fence has been reviewed by city staff and it has been determined that the installation will not affect the city's ability to maintain the overland flowage easement.

FISCAL IMPACT:
N/A

PREVIOUS COUNCIL ACTION(S):
Approve overland flowage easement for Heritage at Grimes Plat 6

BOARD/COMMISSION ACTION(S):
N/A

STAFF/COMMITTEE RECOMMENDATION:
Staff recommends approval of the Resolution Approving Consent and Agreement for Improvements within overland flowage easement for Heritage at Grimes Plat 6 Lot 3.

RESOLUTION NO. _____

RESOLUTION APPROVING
CONSENT AND AGREEMENT FOR IMPROVEMENTS WITHIN OVERLAND FLOWAGE EASEMENT FOR
LOT 3 IN HERITAGE AT GRIMES PLAT 6
2200 NE LITTLE BEAVER DRIVE

WHEREAS, the owners of Lot 3 in Heritage at Grimes Plat 6 in the City of Grimes, Iowa (the "Property") have submitted to the City of Grimes a Consent and Agreement for Improvements within overland flowage easement to permit the installation of a fence within the easement area on the Property; and

WHEREAS, City desires to accept the Consent and Agreement for Improvements within overland flowage easement.

NOW, THEREFORE, BE IT RESOLVED BY THE CITY COUNCIL OF THE CITY OF GRIMES, IOWA:

That the Consent and Agreement for Improvements within overland flowage easement ("Consent and Agreement") regarding Lot 3, Heritage at Grimes Plat 6, is hereby accepted and approved by the City Council of the City of Grimes, that the Mayor is hereby authorized to execute such Consent and Agreement on behalf of the City, and the City Clerk to attest to his signature, and that the City Clerk is hereby authorized and directed to file the Consent and Agreement with the Polk County Recorder.

PASSED AND APPROVED this ____ day of _____, 20__.

By: _____
Scott Mikkelsen, Mayor

ATTEST:

_____
Rochelle Williams, City Clerk

EXHIBIT A

EASEMENT AREA

A 4' black chainlink fence has been proposed to be constructed in an overland flowage easement on Lot 3 of Heritage at Grimes Plat 6 (2200 NE Little Beaver Drive) in accordance to permit number FN-20-06935.

Preparer Information: Alex Pfaltzgraff, 101 NE Harvey St, Grimes, Iowa 50111 Phone (515) 986-3036
Taxpayer Information: City of Grimes 505 NE Harvey Street, Grimes, IA 50111 (515) 986-3036
Return to: Rochelle Williams, City Clerk, City of Grimes, 101 NE Harvey St, Grimes, Iowa 50111

CONSENT AND AGREEMENT FOR IMPROVEMENTS

This CONSENT AND AGREEMENT FOR IMPROVEMENTS ("Agreement") is entered into by and between Jeffery and Jessica Gardner, a married couple, (collectively, the "Property Owners") and the City of Grimes, Iowa, a municipal corporation (hereinafter called "City"):

1. PROPERTY DESCRIPTION. Property Owners own that property legally described as:

   Lot 3 of Heritage at Grimes Plat 6 (2200 NE Little Beaver Drive), an Official Plat, now included in and forming a part of the City of Grimes, Polk County, Iowa ("Property").

2. EXISTING EASEMENT. The Property Owner or Property Owner's predecessor in title, granted that certain overland flowage easement, dated October 10, 2017 recorded on November 17, 2017 in Book 16729, Page 16, in the real property records of Polk County, Iowa (the "Easement") to the City, which prohibited the erection of any fence or other structure within the easement areas described therein (the "Easement Area") without the prior written consent of the City.

3. IMPROVEMENTS. The Property Owners desire to install a fence on the Property, the exact nature and scope of which is described on Exhibit A, attached hereto and incorporated herein (the "Improvement"), which encroaches into the Easement Area, and the City has agreed to consent to the installation of the Improvement within the Easement Area, subject to the conditions set forth in this Agreement.

4. CITY CONSENT TO INSTALLATION OF IMPROVEMENTS. The City hereby consents to the installation of the Improvement as described herein within the Easement Area, provided that the Property Owners install and maintain the Improvement such that the Improvement does not impede the use and enjoyment of the Easement Area by the City as outlined in the Easement. Notwithstanding the foregoing, the Property shall

obtain all necessary licenses and approvals for the installation of the Improvement pursuant to City Ordinances.

5. MAINTENANCE AND LIABILITY. The Property Owners acknowledge and agree that in the event that the City exercises its rights under the Easement, including the rights to construct, reconstruct, repair, replace, enlarge, inspect and maintain the Improvement, the City's duty of restoration for the Easement Area shall be limited to grading and one seeding grass. In no event shall the City shall be responsible for any reconstruction, replacement, repair or maintenance of the fence or any improvements or structure located within the Easement Area, as the result of any activity, including, but not limited to, damage or destruction of the Property Owners' improvement by the City, City Employees, or City Contractors in connection with work in the Easement Area. Except as a result of the gross negligence or intentional misconduct of the City or City Employees, the Property Owners shall indemnify, defend and hold harmless the City from and against any loss or damage to the Property or liability from any claim by the Property Owners or any third party by reason of the construction, installation, use or maintenance of the Improvements.

6. NO OTHER CHANGE. Except as amended herein, each and every term, condition, warranty and provision of the Easement shall remain in full force and effect, and such are hereby ratified, confirmed and approved by the parties hereto.

7. TERMINATION. If the Improvement is destroyed or removed and not replaced with an identical structure to the one defined by Exhibit A within three months, or if the Improvement is replaced with a different structure which is not authorized by the City, this Agreement shall automatically terminate, and the City may file notice of the termination in the records of the Office of the County Recorder. Failure by the City to file such notice shall not be interpreted as approval or further consent by the City, and shall not impact the validity of the termination.

8. RUNS WITH THE LAND. This Agreement shall be deemed to run with the land and shall be binding on the Property Owners and on the Property Owners' heirs, successors and assigns.

9. APPROVAL BY CITY COUNCIL. This Agreement shall not be binding until it has received the final approval and acceptance by the City Council by Resolution which approval and acceptance shall be noted on this Agreement by the City Clerk.

The Property Owners do HEREBY COVENANT with the City that (i) the Property Owners hold said real estate described in this Agreement by title in fee simple; (ii) that the Property Owners have good and lawful authority to convey the same; and (iii) the Property Owners covenant to WARRANT AND DEFEND the said premises against the claims of all persons whomsoever.

Words and phrases herein, including acknowledgment hereof, shall be construed as in the singular or plural number, and as masculine or feminine gender, according to the context.

Signed this 03 day of November, 2020

PROPERTY OWNERS

Jeffery Gardner

Jessica Gardner

STATE OF IOWA)
) SS
COUNTY OF Polk)

On this 03 day of November, 2020, before me, the undersigned, a Notary Public in and for the State of Iowa, personally appeared Jeffery Gardner, to me known to be the identical person named in and who executed the foregoing instrument, and acknowledged that the person executed the instrument as the voluntary act of the person.

NOTARIAL SEAL IOWA
RACHEL B GREVING
Commission Number 816624
My Commission Expires
April 26, 2022

Notary Public in and for the
State of Iowa

My Commission expires Apr. 26, 2022

STATE OF IOWA)
) SS
COUNTY OF Polk)

On this 03 day of November, 2020, before me, the undersigned, a Notary Public in and for the State of Iowa, personally appeared Jessica Gardner, to me known to be the identical person named in and who executed the foregoing instrument, and acknowledged that these persons executed the instrument as the voluntary acts of the persons.

NOTARIAL SEAL IOWA
RACHEL B GREVING
Commission Number 816624
My Commission Expires
April 26, 2022

Notary Public in and for the
State of Iowa

My Commission expires Apr. 26, 2022

CITY OF GRIMES

By: _____
Scott Mikkelsen, Mayor

Attest:

_____
Rochelle Williams
City Clerk

STATE OF IOWA)
) SS
COUNTY OF POLK)

On this ____ day of _____, 20__, before me, the undersigned, a Notary Public in and for the State of Iowa, personally appeared Scott Mikkelsen and Rochelle Williams, to me personally known, and, who, being by me duly sworn, did say that they are the Mayor and the City Clerk, respectively, of the City of Grimes, Iowa; that the seal affixed to the foregoing instrument is the corporate seal of the corporation, and that the instrument was signed and sealed on behalf of the corporation, by authority of its City Council, as contained in Resolution No. _____ adopted by the City Council, under Roll Call of the City Council on the ____ day of _____, 20__, and that Scott Mikkelsen and Rochelle Williams acknowledged the execution of the instrument to be their voluntary act and deed and the voluntary act and deed of the corporation, by it voluntarily executed.

_____
Notary Public in and for the
State of Iowa

My Commission expires _____

REC'D NOV 02 2020

gWorks
3905 South 148th St., Ste 200
Omaha, NE 68144
402-436-2150

gWorks

INVOICE

BILL TO
CITY OF GRIMES IA
ATTN: ACCOUNTS PAYABLE
101 NE HARVEY ST
GRIMES, IA 50111

INVOICE #	DATE	TERMS	DUE DATE
2019-12173	10/25/2020	Net 60	12/24/2020

Please detach top portion and return with your payment.

DESCRIPTION	QTY	UNIT PRICE	AMOUNT
This is your Annual License Fee for SimpleCity Desktop Financial Accounting for the term starting 01/01/2021 and ending 12/31/2021.	1	5,490.64	5,490.64
This is your Product Support Agreement fee for SimpleCity Desktop Financial Accounting for the term starting 01/01/2021 and ending 12/31/2021.	1	6,305.76	6,305.76

BALANCE DUE **$11,796.40**

For billing inquiries, please contact gWorks' Controller, Mr. Gary Hatfield, at 402-436-2150 or by email at gary@gworks.com.
GIS Workshop,LLC doing business as gWorks

CITY OF GRIMES

101 NE Harvey, Grimes, Iowa 50111
515.986.3036 Fax 515.986.3846

AGENDA MEMO

For Meeting of November 10, 2020

AGENDA HEADING:
Resolution Accepting Public Improvements for Destination Ridge Plat 6

SYNOPSIS:
The developer, Knapp Properties, has competed the required public improvement associated with Destination Ridge Plat 6.

Staff has reviewed the improvements and found them to be completed in accordance with the approved construction drawings.

FISCAL IMPACT:
N/A

PREVIOUS COUNCIL ACTION(S):
Approve Destination Ridge Plat 6 – Preliminary Plat
Approve Destination Ridge Plat 6 – Final Plat

BOARD/COMMISSION ACTION(S):
N/A

STAFF/COMMITTEE RECOMMENDATION:
Staff would recommend approval of the Resolution Accepting Public Improvements for Destination Ridge Plat 6

Prepared by Alex Pfaltzgraff, City of Grimres 101 NE Harvey ST, Grimes, IA 50111 Phone: 515 986-3036

RESOLUTION NO. _____

RESOLUTION ACCEPTING PUBLIC IMPROVEMENTS IN DESTINATION RIDGE PLAT 6

WHEREAS, approval of the final plat for Destination Ridge Plat 6 (the "Plat") has previously been given by resolution of the Grimes City Council; and

WHEREAS, at the time of approval of the final plat, certain public improvements within the Plat were not completed, and Knapp Properties. (the "Developer") provided a bond or check associated with the remaining cost of the improvements for the Plat; and

WHEREAS, the public improvements are now completed and in a condition to be formally accepted by the City, and the City engineer has recommended such acceptance.

NOW, THEREFORE, BE IT RESOLVED BY THE CITY COUNCIL, CITY OF GRIMES, IOWA:

1. That the public improvements in Destination Ridge Plat 6, including water mains, and sanitary sewers are hereby accepted and incorporated into the respective water main and sanitary sewer systems in the City of Grimes, and the City Clerk is hereby directed to return to the Developer any bonds or checks securing the completion of the public improvements hereby accepted.

2. That the obligations of Developer with respect to Destination Ridge Plat 6 are hereby declared to be satisfied.

This resolution shall be filed of record with the Polk County, Iowa Recorder.

PASSED AND APPROVED this _____ day of _____, 2020.

CITY OF GRIMES, IOWA
By: _____
Scott Mikkelsen, Mayor

ATTEST:

_____
Rochelle Williams, City Clerk

CITY OF GRIMES

Development Services
410 SE Main Street, Suite 102
Grimes, IA 50111
Phone (515) 986-4050
Fax (515) 986-4480
www.grimesiowa.gov

CERTIFICATE OF COMPLETION

Destination Ridge Plat 6

Grimes, Iowa

11/10/20

This is to certify that the construction improvements on the Destination Ridge Plat 6 project have been completed in substantial compliance with the plans and specifications for the project. I hereby recommend acceptance of the project.

Respectfully submitted,

Matt Ahrens, P.E.
Iowa License Number 17132

Prepared by Alex Pfaltzgraff, City of Grimes 101 NE Harvey ST, Grimes, IA 50111 Phone: 515 986-3036

RESOLUTION NO. 11-0720

RESOLUTION ACCEPTING PUBLIC IMPROVEMENTS IN DESTINATION RIDGE PLAT 6

WHEREAS, approval of the final plat for Destination Ridge Plat 6 (the "Plat") has previously been given by resolution of the Grimes City Council; and

WHEREAS, at the time of approval of the final plat, certain public improvements within the Plat were not completed, and Knapp Properties. (the "Developer") provided a bond or check associated with the remaining cost of the improvements for the Plat; and

WHEREAS, the public improvements are now completed and in a condition to be formally accepted by the City, and the City engineer has recommended such acceptance.

NOW, THEREFORE, BE IT RESOLVED BY THE CITY COUNCIL, CITY OF GRIMES, IOWA:

1. That the public improvements in Destination Ridge Plat 6, including water mains, and sanitary sewers are hereby accepted and incorporated into the respective water main and sanitary sewer systems in the City of Grimes, and the City Clerk is hereby directed to return to the Developer any bonds or checks securing the completion of the public improvements hereby accepted.

2. That the obligations of Developer with respect to Destination Ridge Plat 6 are hereby declared to be satisfied.

This resolution shall be filed of record with the Polk County, Iowa Recorder.

PASSED AND APPROVED this _____ day of _____, 2020.

CITY OF GRIMES, IOWA
By: _____
Scott Mikkelsen, Mayor

ATTEST:

_____
Rochelle Williams, City Clerk

RESOLUTION TO ENTER INTO A CONTRACT FOR PROFESSIONAL SERVICES

Grimes Resolution No.11-0420

WHEREAS, the City of Grimes (Grimes) is planning to reopen the Grimes Community Complex for more community utilization beginning on November 11, 2020; and,

WHEREAS, this community utilization will make necessary regular and professional cleaning services;

WHEREAS, City Staff has recommended that Reliable Maintenance Company (RMC) be contracted to provide these services based on proposed cost, professional reputation and experience;

NOW, THEREFORE, IT IS HEREBY RESOLVED by the City Council of the City of Grimes, Iowa, that the Mayor is authorized to execute the attached Maintenance Agreement with RMC to provide janitorial services at the Grimes Community Complex.

Passed by the City Council of the City of Grimes, Iowa, by of vote of ___to___ on the 10th day of November, 2020, and approved by the Mayor on the 10th day of November, 2020.

_____

Scott Mikkelsen, Mayor

Attested:

_____

Rochelle Williams, City Clerk

Reliable Maintenance Company
"Professional Janitorial Services since 1973"

2525 Douglas Avenue
Des Moines, IA 50310
(515) 255-3032

MAINTENANCE AGREEMENT WITH THE CITY OF GRIMES

- **Reliable Maintenance Company**, hereinafter referred to as **RMC**, agrees to provide janitorial services for the **City of Grimes (City)** as per the attached schedule for **Grimes Community Complex (Complex),** 410 SE Main St., Grimes, IA 50111

- Commencing on the **11th day of November 2020, and ending on June 30, 2021,** RMC agrees to perform the labor and work specified herein.

- RMC shall furnish, at its own cost and expense, all labor, services, and chemicals. The labor and work specified herein shall be performed under the sole supervision, management and control of RMC as an independent contractor.

- RMC shall perform the services contracted herein, without any additions to the monthly sum, irrespective of whether RMC is required to pay for employee overtime or for duties required.

- RMC agrees to provide the City with an insurance declaration sheet, showing following insurance coverage covering the duration of this Agreement:

    - Public liability insurance with minimum limits of:
      5,000,000 for Bodily Injury
      5,000,000 for Property Damage
    - Workmen's Compensation as required by Iowa law.

- Requests for additional services not contracted for herein shall be made in writing and will be billed at a mutually agreed to additional cost.

- Either party may terminate this contract for any reason, effective thirty (30) days after notice is served in writing. If terminated, RMC shall only receive payment for unpaid services through the date of termination.

- In the event of total destruction of the premises to be serviced, this contract shall be automatically cancelled and only services rendered will be billed.

  Compensation for the services specified herein (attached document), and shall be made payable to RMC (Federal ID #42-1422784)

- **From November 11, 2020, to February 28, 2021, RMC shall provide cleaning services for all weekdays when the Complex is open, calculated on a per diem basis of $193.75 for actual work performed, as follows:**

- November 2020: $2,131.25 for 11 days
- December 2020: $3,681.25 for 19 days
- January 2021: $3,681.25 for 19 days
- February 2021: $3,681.25 for 19 days

  Total budgeted amount: $13,175

- **From March 1, 2021 to June 30, 2021, RMC shall supply professional cleaning services to the Complex on two mutually agreed weekdays per week, calculated on a per diem basis of $193.75 for actual work performed, as follows:**

- March 2021: $1,743.75 for 9 days
- April 2021: $1,743.75 for 9 days
- May 2021: $1,550 for 8 days
- June 2021: $1,743.75 for 9 days

  Total budgeted amount: $6,781.25

  Total Budgeted Amount for Agreement: $19,956.25

INDEMNITY AGREEMENT-RMC agrees to indemnify and hold harmless the City, its officers, agents, and employees from any and all claims, settlements and judgments, to include all reasonable investigative fees, attorney's fees, and court costs for any

damage or loss which is due to or arises from a breach of this Agreement, or from negligent acts, errors or omissions in the performance of professional services under this Agreement by anyone for whom RMC is legally liable. In addition, RMC shall hold the City harmless for any claims by RMC employees who may claim that they were injured in the course of their employment while at the Complex.

THIS AGREEMENT CONTAINS ALL THE TERMS OF THE AGREEMENT BETWEEN THE PARTIES, AND THE AGREEMENT IS EXECUTED BELOW BY REPRESENTATIVES OF THE PARTIES WITH AUTHORITY TO SIGN THE AGREEMENT ON BEHALF OF THEIR RESPECTIVE PARTIES.

RELIABLE MAINTENANCE COMPANY

_____ _____

Signed Date

_____

Title

CITY OF GRIMES

_____

Mayor Scott Mikkelsen

Attest:

_____

City Clerk Rochelle Williams

_____

Date

City of Grimes Claims 11 10 2020

PREMIER OFFICE EQUIPMENT	COPIER CONTRACT	133.1
CENTRAL PUMP AND MOTOR	REPAIR BLOWER 4 @ WASTE WTR	665.6
HEARTLAND PAYMENT SYSTEMS	CC fees	552.86
PRINCIPAL LIFE INSURANCE	EMPLOYEE INSURANCE	845.19
3M COMPANY	SIGN SUPPLIES	3,134.29
AIA CORPORATION	DUTY UNIFORM RATH	237.5
ALLENDER BUTZKE ENGINEERS	R/O WTP	992.45
EUROFINS TESTAMERICA	STATE TESTS	2,692.50
JOHNSON CONTROLS SECURITY	BURGLAR/FIRE ALARM CITY HALL	538.89
BAKER & TAYLOR	LIBRARY MATERIALS	699.94
BLACK HILLS ENERGY	POWER	1,400.17
COMMERCIAL APPRAISERS OF	WRA TRUNK SEWER EXTENSION	17,500.00
BOMGAARS	EMPLOYEE SUPPLIES/PW SUPPLIES	865.16
KOHLES & BACH, INC	HVAC REPAIR @ PW	135.88
KOCH OFFICE GROUP	COPIER CONTRACT OVERAGE	69.14
CAPITAL CITY EQUIP. CO.	MAINT BOBCAT UTV	54.92
CITY OF WEST DES MOINES	METRO HOME IMPROVE PROGRAM	27,969.00
CITY STATE BANK	CC fees	49.25
CIVIL DESIGN ADVANTAGE	WRA SANITARY SEWER CONNECTION	2,220.25
COLLECTION SERVICES CENTER	CHILD SUPPORT	1,213.62
CULLIGAN WATER COND.	WATER COOLER	46.45
CUSTOM STEEL BUILDERS	REPAIRS ON S204	50
DELTA DENTAL OF IOWA	EMPLOYEE INSURANCE	201.94
MILLER DAKOTA	HBI SPRING/FALL 2020	1,000.00
DORRIAN HEATING & COOLING	REPLACE MOTOR RAW BLDG MAU	1,788.40
HOME DEPOT CREDIT SERVICE	TOOLS FOR RUNNING WIFI CABLES	80.91
RD MCKINNEY PLUMB/EXC	MOVE HYDRANT SE 11TH ST	3,150.00
FAREWAY STORES, INC.	PW SNOW MEETING	14.38
FINISH LINE AUTO WORKS	REPAIR 2008 FORD TRUCK	1,224.19
CFI SALES	EQUIPMENT MAINT	2,297.00
GRIMES ASPHALT AND PAVING	POTHOLE REPAIR	83.62
HACH COMPANY	CHEMICALS	127.58
HARN R/O	FILTER BAGS	1,751.63
RODAN OFFICE CLEANING	CLEANING	630
HILLYARD	HAND SANITIZER	126.3
IMWCA	WORK COMP INSTALL #5	8,595.00
INTERSTATE BATTERY	BATTERY FOR L375	28.95
IOWA DEPT OF REVENUE	October WET/Sales tax	40,493.00
INTEGRATEDPRINT SOLUTIONS	BECKER & CJ BUSINESS CARDS	150
IOWA DEPT.OF TRANSPORTION	ROAD WORK AHEAD SIGNAGE	859.91
IOWA ONE CALL	LOCATES	454.5
JETCO, INC.	REPAIR BLOWER 3 @ WASTE WATER	1,559.30
JOHNSTONE SUPPLY	MAU FILTERS	382.35
KECK ENERGY	FUEL	2,721.38
KELTEK INCORPORATED	WARNING LTG ON S208 SNOW PLOW	124.26
JOHNSON KENNETH W.	HBI SPRING/FALL 2020	1,000.00
LIBERTY READY MIX	200 S JAMES ST - REPAIRS	380
LOGAN CONTRACTORS SUPPLY	CONCRETE TOOLS	140.59
LOGOED APPAREL & PROMOTIO	EMPLOYEE CLOTHING	295.44
MAIL SERVICES	MONTHLY REMINDER	415.5
MEDIACOM	PHONES	399.56
METRO WASTE AUTHORITY	JULY/AUG/SEPT CITY GARBAGE	101,857.65
MIDWEST TAPE	LIBRARY MATERIALS	689.94
MIDAMERICAN ENERGY	POWER	19,109.29
MISSISSIPPI LIME CO.	CHEMICALS	4,390.75
MUNICIPAL SUPPLY, INC.	METERS	3,636.00
OFFICE DEPOT LIBRARY	FACE MASKS	66.67
OFFICE DEPOT CITY HALL	PAPER SUPPLIES/OFFICE SUPPLIES	220.23
TRUE VALUE	PROPANE & PAINT SUPPLIES	65.22
GRIMES TIRE & AUTO	TIRES FOR ATV	482.53
PETERSON PEST & TERMITE	PEST CONTROL	35

PITNEY BOWES, INC.	POSTAGE MACHINE LEASE	238.41
ARNOLD MOTOR SUPPLY	EQUIP MAINTENANCE	725.02
POLK CO RECORDER	CONSENT AGREE & ST NAME CHANGE	49
POLK COUNTY TREASURER	SE 37TH & S JAMES-PR BUS PK	611
PRAXAIR DISTRIBUTION INC.	WELDING SUPPLIES	126.79
JCG LAND SERVICES INC.	BVR CRK WTR SHED IMPROVE	118.75
SNYDER & ASSOCIATES	2020 SIGNAL NETWORK COMM	6,000.00
SMITH FERTILIZER	BEET RTU FOR STREETS	3,435.16
SPRAYER SPECIALTIES	EQUIP MAINT	18.2
TAPCO	COUNTY LINE RD SIGNAGE	7,020.50
P.R.I.M.E. BENEFIT SYSTEM	FLEX SPENDING	1,237.65
THORPE WATER DEVELOPMENT	DISCONNECTS	200
TOTAL QUALITY	NOVEMBER BILL	12,022.45
UNITED CONTRACTORS, INC	STREET MAINT	21.51
CINTAS CORPORATION - #762	FLOOR MATS/SUPPLIES	603.1
USA BLUE BOOK	GLOVES	386.7
USIC LOCATING SERVICES	LOCATES	13,878.61
VERIZON WIRELESS, BELLEVU	IPADS	498.73
VEENSTRA AND KIMM, INC.	WRA CONNECTOR	36,305.90
VAN WALL EQUIPMENT	REPAIRS JOHN DEERE 317G	2,319.33
WASTE MANAGEMENT OF IOWA	GARBAGE	241.05
WENDLING QUARRIES, INC.	BALL DIAMOND LIME	370.02
WELLMARK BLUE CROSS	EMPLOYEE INSURANCE	2,144.56
WHITFIELD & EDDY	SERVICES THRU SEPT 30, 2020	23,222.50
WILLIAMS SCOTSMAN, INC	NOVEMBER LEASE	359
ZOOBEAN	3 YR LICENSE AGREEMENT/LIBRARY	2,385.00
FIDELITY SECURITY LIFE IN	EMPLOYEE INSURANCE	314.84
GATEHOUSE MEDIA IOWA HOLD	PUBLICATION	943.76
RJ MARTIN EXCAVATING & TR	LIME DELIVERY/SPORTS COMPLEX	1,623.00
ENVISIONWARE	LIBRARY RFID TAGS	4,762.00
EFTPS	FED/FICA TAX	41,795.18
SHANNON ANN	HBI SPRING/FALL 2020	1,000.00
GODDARD AMANDA	HBI SPRING/FALL 2020	1,000.00
JONES CHRISTIAN	HBI FALL 2020	500
KANOPY INC	LIBRARY MATERIALS	26
CSG FORTE PAYMENTS, INC	CC FEES	3,861.41
EJS SUPPLY	REPLACEMENT PLOW BLADE EDGES	16,320.00
NEUMEYER ANGIE	REFUND YOUTH BASKETBALL	70
FIRE AUX SUPPLIES	Fire Association Oct expense	260.15
EAKLE ROBERT/PATRICIA	HBI FALL 2020	500
SUMMIT TECHNOLOGIES LLC	WIFI FOR COMM CENTER	5,780.00
HR GREEN	PAVEMENT MANGEMENT STUDY	5,950.50
GWORKS	2020 TAX FORMS	298.15
CB&I LLC	WATER TOWER	100,493.61
PROGRESSIVE STRUCTURES	16 RAW WATER MAIN"	73,137.74
MENARDS GRIMES	CABLE & ELECTRICAL TAPE	369.36
MI-FIBER, LLC	INTERNET	14
BOLTON AND MENK INC	SW CO LN RD IMPROVEMENTS	48,796.50
POMP'S TIRE SERVICE, IND	4 TIRES FOR FD A384	1,388.00
BULK TRANSPORT CO EAST	LIME DELIVERY	1,786.55
FIRST NET	WIRELESS	127.81
HULTMAN, LIZ	HBI FALL 2020	500
SHANK CONSTRUCTORS INC	R/O WATER TREATMENT PLANT	1,080,758.00
KROLL, DERRICK	HBI SPRING/FALL 2020	1,000.00
SCHILDBERG CONSTRUCTION	LTL BVR & PR CRK CHANNEL IMPRV	30,749.61
VOYA	DEFER COMP PRE	731
AIG	DEFER COMP ROTH	332.5
HORACE MANN	DEFER COMP ROTH	175
MASSMUTUAL	DEFER COMP PRE	435
MITEL	MITEL PHONE	1,531.50
FINE, DEREK	REFUND FACILITY RESERVATION	120
WULFEKUHLE INJECCTION	DRYING BED MAINTENANCE #2	8,500.00

MICROMARKETING LLC	MATERIALS	122.87
ANKENY SANITATION	PW & WTR	1,999.14
ZOOM VIDEO COMMUNICATION	OCT OVERAGE FEE	9
KESTEL, COLE	FLAG FOOTBALL REF	255
NADERMANN CANTON	FLAG FOOTBALL REF	255
ASSINK, DREW	FLAG FOOTBALL REF	258.75
MARTIN, EVANN	REIMBURSE FLU SHOT EVANN M	25
POLK CO HEATING & COOLING	REFUND 1000 NE 13TH ST PERMIT	75
FIRST BANK OF LYNNVILLE	ALL TERRAIN SEEDING	8,989.23
MCCLURE, KARA	REFUND YOUTH BASKETBALL	70
SOUTHMAYD, KATHERINE	REFUND YOUTH BASKETBALL	70
DILL, CADEN	FLAG FOOTBALL REF	255
DEPOSIT REFUNDS	REFUND DATE 11/09/2020	8,418.49
PAYROLL CHECKS	TOTAL PAYROLL CHECKS	114,289.15
	CLAIMS TOTAL	**1,948,676.87**
	GENERAL FUND	226,748.05
	LIBRARY FUND FUND	23,013.16
	FIRE/RESCUE AUXILIARY FUND	260.15
	ROAD USE TAX FUND	38,744.55
	EMPLOYEE BENEFITS FUND	9,033.90
	CP - PRAIRIE/LITTLE BEAVE FUND	39,738.84
	CP-SW COUNTY LINE ROAD FUND	38,414.50
	CP - S JAMES/SE 37TH ST FUND	611
	CP-NE GATEWAY/HOPE COMM FUND	16,380.00
	CP -BEAVER CK WATERSHED FUND	118.75
	CP-16 Water Main FUND"	73,137.74
	CP-Water Tower 2019 FUND	100,493.61
	CP-Water Plant Exp 2019 FUND	1,081,750.45
	WRA SANI SEWER CONNECTION FUND	55,300.65
	NW TERRITORY LIFT STATION FUND	7,088.00
	HWY44 & COUNTY LN RD 2020 FUND	1,022.50
	ANNUAL SIGNAL IMPROVEMENT FUND	6,000.00
	PAVEMENT COND ANALYSIS FUND	5,950.50
	WATER FUND	75,736.21
	WATER DEPOSITS FUND	8,418.49
	SEWER FUND	33,861.04
	LANDFILL/GARBAGE FUND	104,097.84
	STORM WATER FUND	2,756.94
		1,948,676.87

CATCH DES MOINES

CITY OF GRIMES

NOVEMBER 10, 2020

CATCH DES MOINES

2019/2020 YEAR IN REVIEW

TRAVEL EXPENDITURES

Polk and Dallas counties received more than one quarter of the $9.3 billion in state-wide spending in 2019 according to the Iowa Economic Development Authority's "Economic Impact of Travel on Iowa Counties" released August 2020.

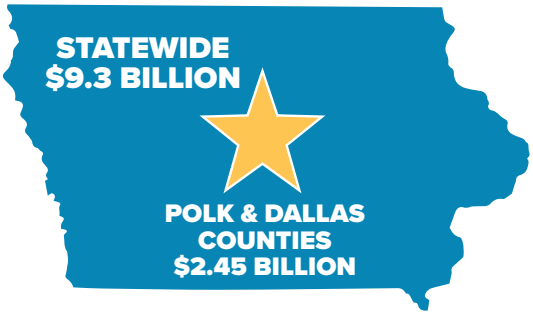

- THIS SPENDING SUPPORTS MORE THAN 19,500 JOBS IN POLK AND DALLAS COUNTIES.
- EACH HOUSEHOLD WOULD HAVE TO PAY $700 MORE IN TAXES WITHOUT THE REVENUE GENERATED BY TRAVEL AND TOURISM.

MEDIA HIGHLIGHTS

- MEDIA/PR IMPRESSIONS: 835,317,611
- ADVERTISING VALUE EQUIVALENCY: $7,630,469
- MAJOR PUBS: WALL STREET JOURNAL, USA TODAY, FOX BUSINESS (TV), CBS THIS MORNING, NBC NEWS

SOCIAL MEDIA

9,080 NEW SOCIAL MEDIA FOLLOWERS

15,863,558 IMPRESSIONS FROM SOCIAL MEDIA

469,321 ENGAGEMENTS FROM SOCIAL MEDIA

1,008,952 WEB SESSIONS

WEB SESSIONS ON *CATCHDESMOINES.COM*

>>> 89% PARTNER RETENTION RATE <<<

IMPACT OF COVID-19 CANCELLATIONS

Due to COVID-19, we saw significant short and long term losses. We lost 168 events from cancellations that were scheduled to be held in 2019-2020. Due to these cancellations, our region lost $94.22M in economic impact. We also had significant future arrival dates affected. 60 future events for 2020-2021 and beyond were canceled, which will attribute to an additional $157.78M economic impact loss.

388 CONVENTIONS AND EVENTS UTILIZED CATCH DES MOINES RESOURCES IN 2019-2020

THIS SUPPORT INCLUDES GROUP SERVICING, EVENT PROMOTION, CATCH CREW, & PLANNER TOOLKITS

IN 2019-2020, 199 CONVENTIONS/EVENTS OCCURED BECAUSE OF CATCH DES MOINES SALES EFFORTS

THIS RESULTED IN $47.29 MILLION OF ECONOMIC IMPACT

IN 2019-2020, CATCH DES MOINES SALES STAFF BOOKED 270 EVENTS

THIS WILL GENERATE $103 MILLION OF ECONOMIC IMPACT

SIGNIFICANT BOOKINGS

- UNITED STATES DEPARTMENT OF VETERAN AFFAIRS
  - -NATIONAL VETERANS GOLDEN AGE GAMES
  - JULY 2023
- US YOUTH SOCCER ASSOCIATION (USYS)
  - -NATIONAL PRESIDENTS CUP
  - JULY 2021
- NIKE TOURNAMENT OF CHAMPIONS 2020
  - JULY 2020
- USA GYMNASTICS CHAMPIONSHIPS
  - JUNE 2022
- IOWA STATE POOL PLAYERS ASSOCIATION
  - -IOWA STATE 8 & 9 BALL CHAMPIONSHIPS
  - APRIL 2021 AND APRIL 2022
- NATIONAL ASSOCIATION OF COUNTY AGRICULTURAL AGENTS
  - -ANNUAL MEETING/PROFESSIONAL IMPROVEMENT CONFERENCE
  - AUGUST 2023
- KENNEDY CENTER AMERICAN COLLEGE THEATER FESTIVAL
  - -REGION 5 FESTIVAL
  - JANUARY 2022 AND JANUARY 2023
- NATIONAL ASSOCIATION OF SECRETARIES OF STATE
  - -SUMMER CONFERENCE
  - JULY 2021
- 2021 NATIONAL AGRICULTURE IN THE CLASSROOM CONFERENCE
  - JUNE 2021

MAJOR EVENTS HOSTED

- CHRISTIAN CHURCH (DISCIPLES OF CHRIST)
  - - GENERAL ASSEMBLY OF THE CHRISTIAN CHURCH
  - JULY 2019
- P.E.O. SISTERHOOD
  - - P.E.O. CONVENTION OF INTERNATIONAL CHAPTER
  - SEPTEMBER 2019
- USA TRACK & FIELD
  - -TOYOTA USATF OUTDOOR CHAMPIONSHIPS
  - JULY 2019
- USA SWIMMING
  - -TYR PRO SWIM SERIES
  - MARCH 2020
- NATIONAL FRAME BUILDING ASSOCIATION
  - -2020 ANNUAL EXPO
  - FEBRUARY 2020
- BIOTECHNOLOGY INNOVATION ORGANIZATION
  - -BIO WORLD CONGRESS
  - JULY 2019
- IOWA CAUCUS
  - -ORGANIZED AND HOSTED OVER 2,000 MEDIA MEMBERS FROM ALMOST 30 DIFFERENT COUNTRIES
  - FEBRUARY 2020

COVID-19

IMPACTS

326 EVENTS **CANCELLED** OR **POSTPONED** WITH AN ESTIMATED IMPACT OF MORE THAN **$290 MILLION**

As of November 2020

CATCH DES MOINES

SALES

RESULTS

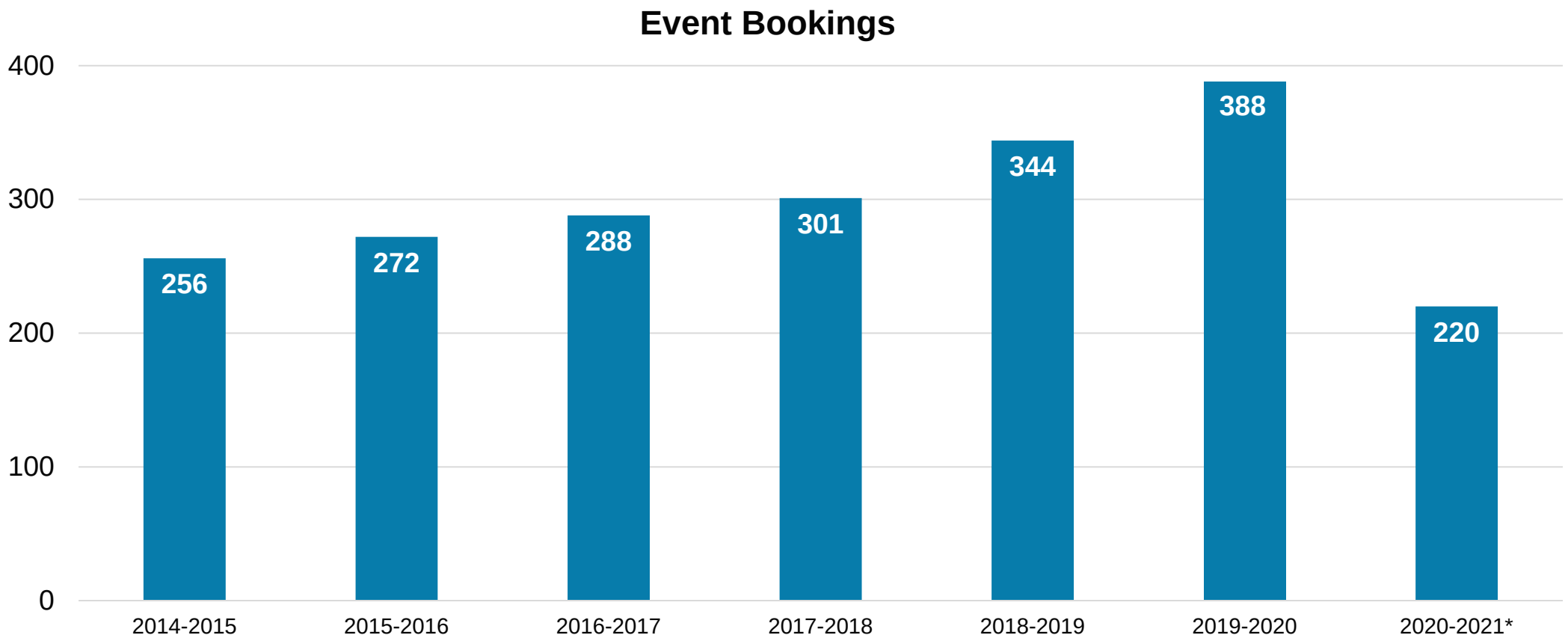

*2020-2021 bookings goal all other data is definite bookings.

CATCH DES MOINES

COVID-19

STRATEGIES IMPLEMENTED

Weekly hotel communication and meetings

Monitor and communicate event cancelations

Facilitate/coordinate postponed events

Promotion of local businesses - #DSMLocalChallenge

“Buy Now, Visit Later” Hotel Bond Program

Support local resources hub on website

Des Moines Restaurant Week

Latest new video on outdoor recreation

CATCH DES MOINES

STR REPORT

MONTHLY STR DATA

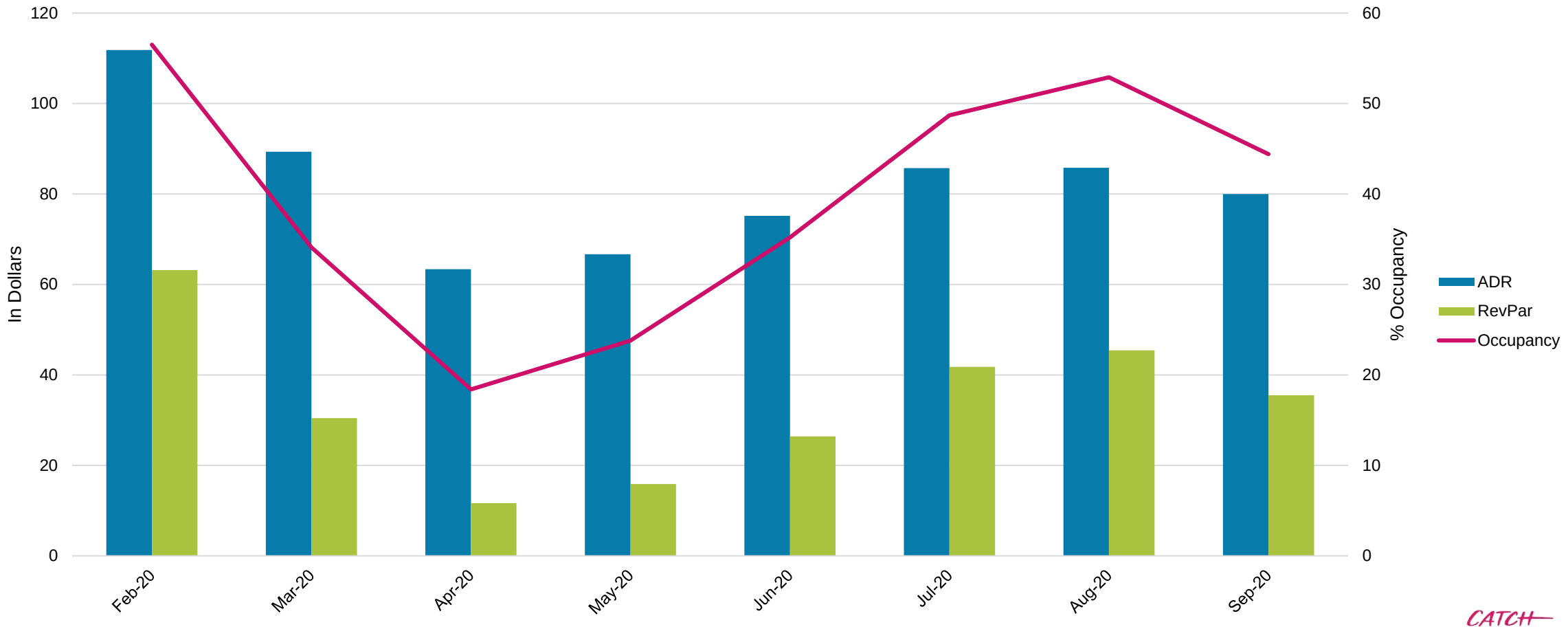

Source: 2020 STR, LLC / STR Global, Ltd. trading as "STR". © CoStar Realty Information, Inc.

CATCH DES MOINES

STR REPORT

WEEKLY STR DATA

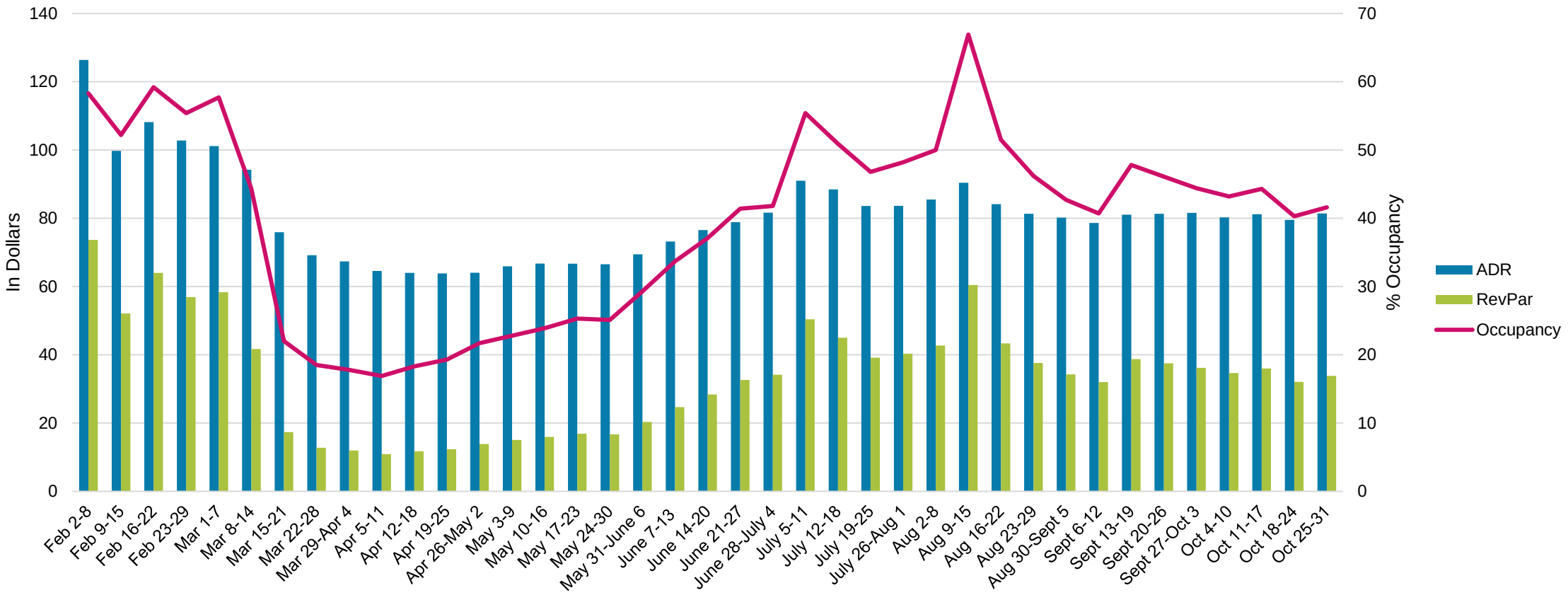

Source: 2020 STR, LLC / STR Global, Ltd. trading as "STR". © CoStar Realty Information, Inc.

CATCH DES MOINES

HOTEL/MOTEL TAX

ADR & OCCUPANCY

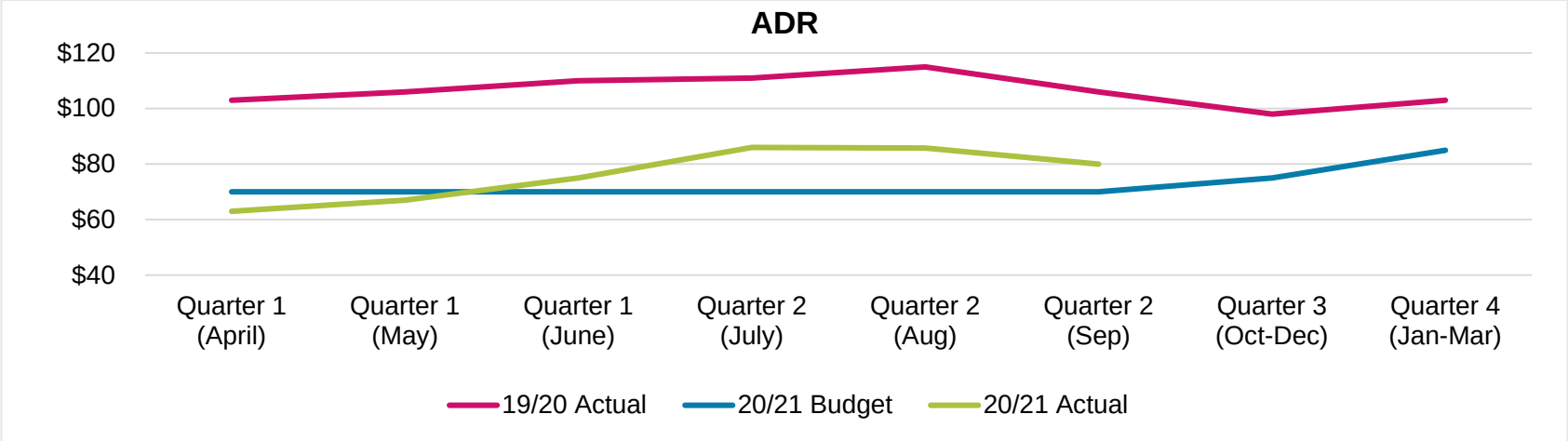

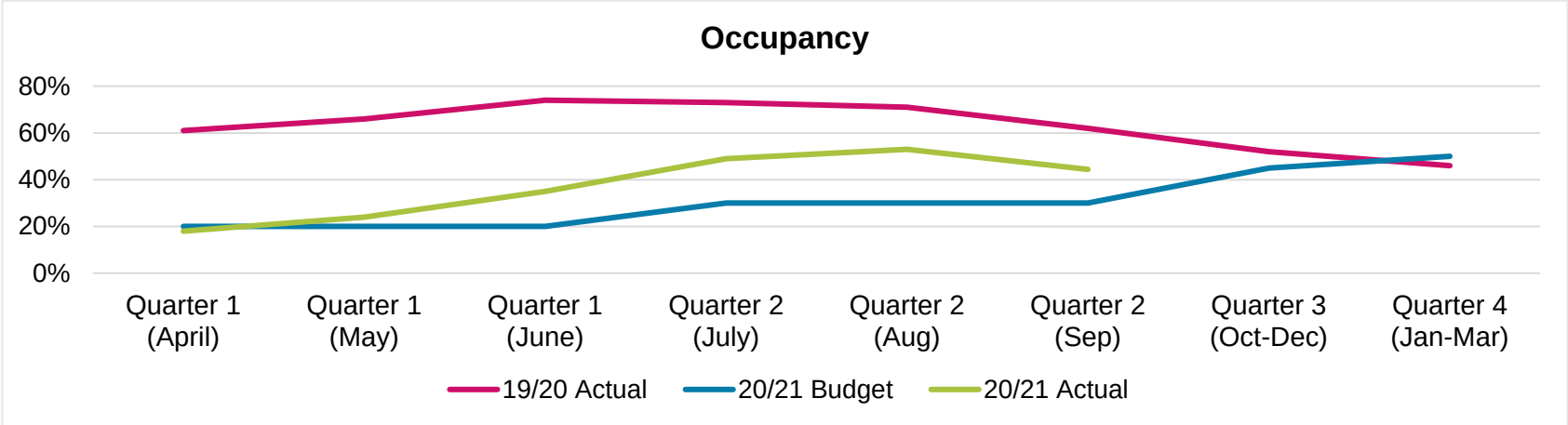

CATCH DES MOINES

SALES

EVENTS PIPELINE

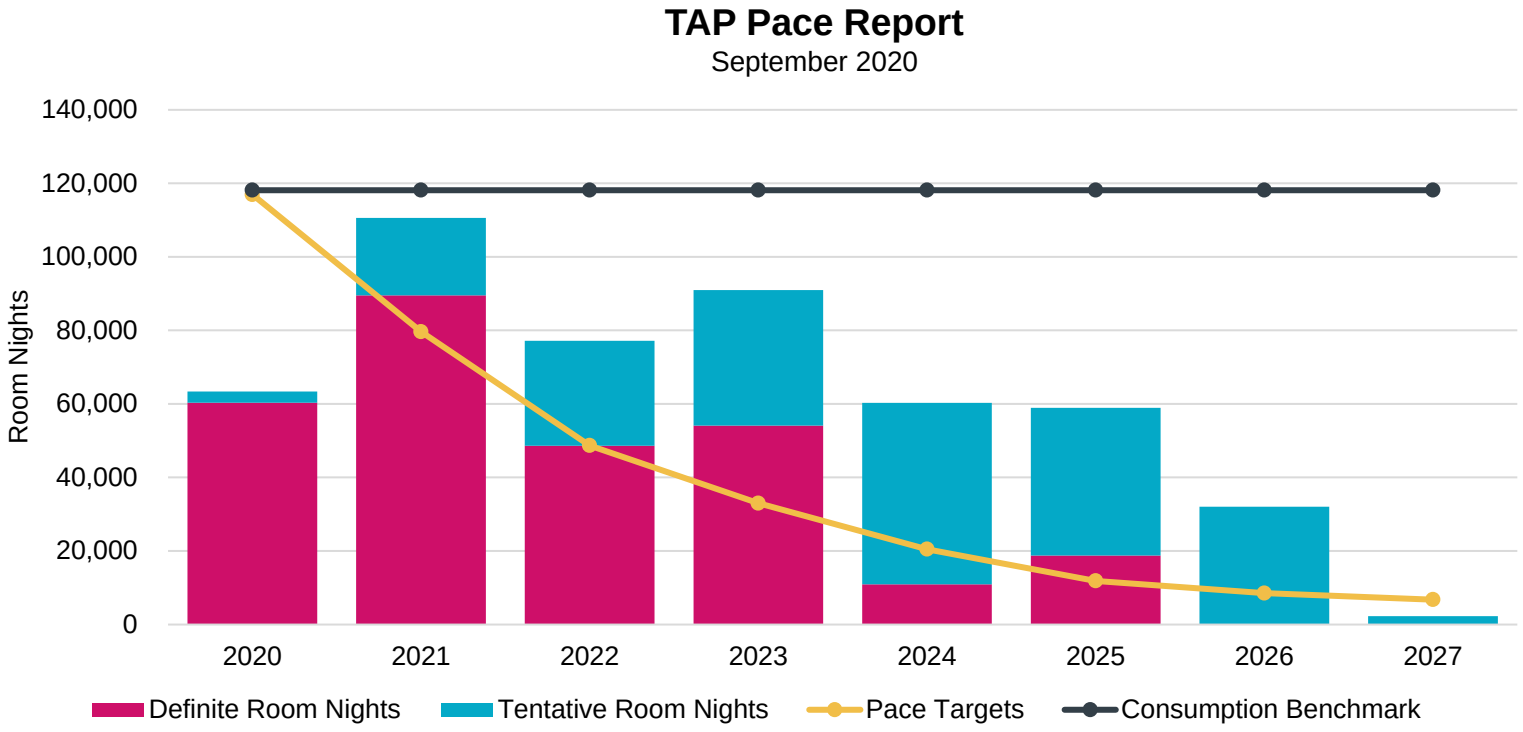

Events Pace Percentage	2020	2021	2022	2023	2024	2025
Des Moines	45%	97%	120%	100%	43%	200%
Des Moines, Lexington, Providence, Spokane	42%	88%	94%	78%	45%	133%
Des Moines, Louisville, Milwaukee, Omaha	44%	100%	85%	91%	56%	39%

Source: Knowland Group, Des Moines_2020_08_01_TAP_report / Des Moines_2020_08_01_ PeerSet_report / Des Moines_2020_08_01_ PeerSet_report2

CATCH DES MOINES

SALES

STRATEGIES

Focus on retaining what is on the books for 2020-21

State Association and National Planner Advisory Boards

Staying Top of Mind for Planners

- Mailers
- Newsletters
- Short term bookings: Agricultural, Social, Sports

Upcoming Site Visits

Upcoming Events

- Iowa State Dance & Drill Team (Nov)
- US Customer Harvesters (Jan)
- Iowa Pork Congress (Jan)
- Iowa Ag Expo (Power Farming) (Feb)
- 2021 is set to be strong with Jr HS Rodeo, IRONMAN, US Youth Soccer, National Speech & Debate Tournament, USA/Canada Lions

MARKETING

STRATEGIES

Leisure Marketing: focus on drive markets (Iowa) and outdoor activities and attractions.

Heavy emphasis on digital only marketing to get highest number of impressions and engagements with our limited budget this year.

Creation of new itineraries focused on seasonality, specific targeted demographics and a wide variety of interests.

Sales Marketing: Focus on targeting meeting planners through industry trade pub communications and LinkedIn advertising

Reopening resources landing page for locals, visitors and meeting planners

- Open restaurants and attractions
- Facilities and transportation information
- Public mandates
- Parks and outdoor activities

Social Media Success

- YouTube subscribers have more than doubled (60% increase)
- People have watched over 621 hours of content on YouTube the past year alone.
- Instagram has seen a 65% increase in followers over the past 2 years

New promotional videos

- Event & Conventions (Sales)
- Outdoors (Leisure)
  - Over 66,000 views in the first week of it's launch
  - Most engaged video yet on social media
- Meeting Planners (Sales)

Marketing and sales collateral continuously being updated with a safe and clean perspective.

CATCH DES MOINES

CATCH DES MOINES GENERATED $47.29 MILLION IN ECONOMIC IMPACT

BY BRINGING MEETINGS, CONVENTIONS, SPORTING EVENTS AND LEISURE TRAVELERS TO THE COMMUNITY

2019-2020

CATCH DES MOINES

101 NE Harvey, Grimes, Iowa 50111
515.986.3036 Fax 515.986.3846

AGENDA MEMO

For Meeting of November 10, 2020

AGENDA HEADING: Public Hearing – Northwest Territory Connection Fees

SYNOPSIS:
As noted in previous meetings, the City of Grimes has traditionally not utilized connection fees to assist with the financing of public infrastructure projects that benefit development projects. In the past, these infrastructure projects have either been funded entirely by the City, or burden upon one individual developer.

At the October 27th Council meeting, the City Council passed an ordinance on the Master Connection Fee District. This action allowed for the City to now utilize connection fee districts to assist in the funding of certain infrastructure improvement projects. It is important to note that these connection fees do not come due until development occurs upon the property. The properties within the proposed district may continue to operate and function as they do today, and can be sold or subdivided for the purposes of a land transaction, without the fees coming due. Once the property is approved for development (Final Plat), the fees will become due for the area being platted.

As you are all aware, the City has retained Veenstra & Kimm to develop plans for a lift station and trunk sewer that would serve Northwest Territory. This lift station will provide immediate service to the Willow Hills Development, which was recently annexed and recently obtained approval for Rezoning and Preliminary Plat. In addition to the Willow Hills development, an additional 575 acres of development is now serviceable with sanitary sewer.

Veenstra & Kimm is nearing completion of the preliminary plans, and an opinion of cost associated with the sewer improvements. Staff has anticipated since conception that this particular sewer shall be subject to a connection fee. Based upon the service area and costs, the following connection fees are recommended to be established.

Lift Station Connection Fee:
Total Cost = $1,368,000
Service Area = 633 Acres
City Share: 30%

101 NE Harvey, Grimes, Iowa 50111
515.986.3036 Fax 515.986.3846

Connection Fee: $1,513.00/Acre

Trunk Sewer Connection Fee:
Total Cost = $476,160
Service Area = 195
City Share: 0%
Connection Fee: $2,442/Acre

Staff has published and mailed the appropriate notices and has had conversations with most of the property owners impacted. No written communication has been received.

FISCAL IMPACT:
N/A

PREVIOUS COUNCIL ACTION(S):
Approval of the Master Connection Fee Ordinance - 2020

BOARD/COMMISSION ACTION(S):
N/A

STAFF/COMMITTEE RECOMMENDATION:
Staff would recommend approval of the first consideration of Ordinance 745 and Ordinance 746

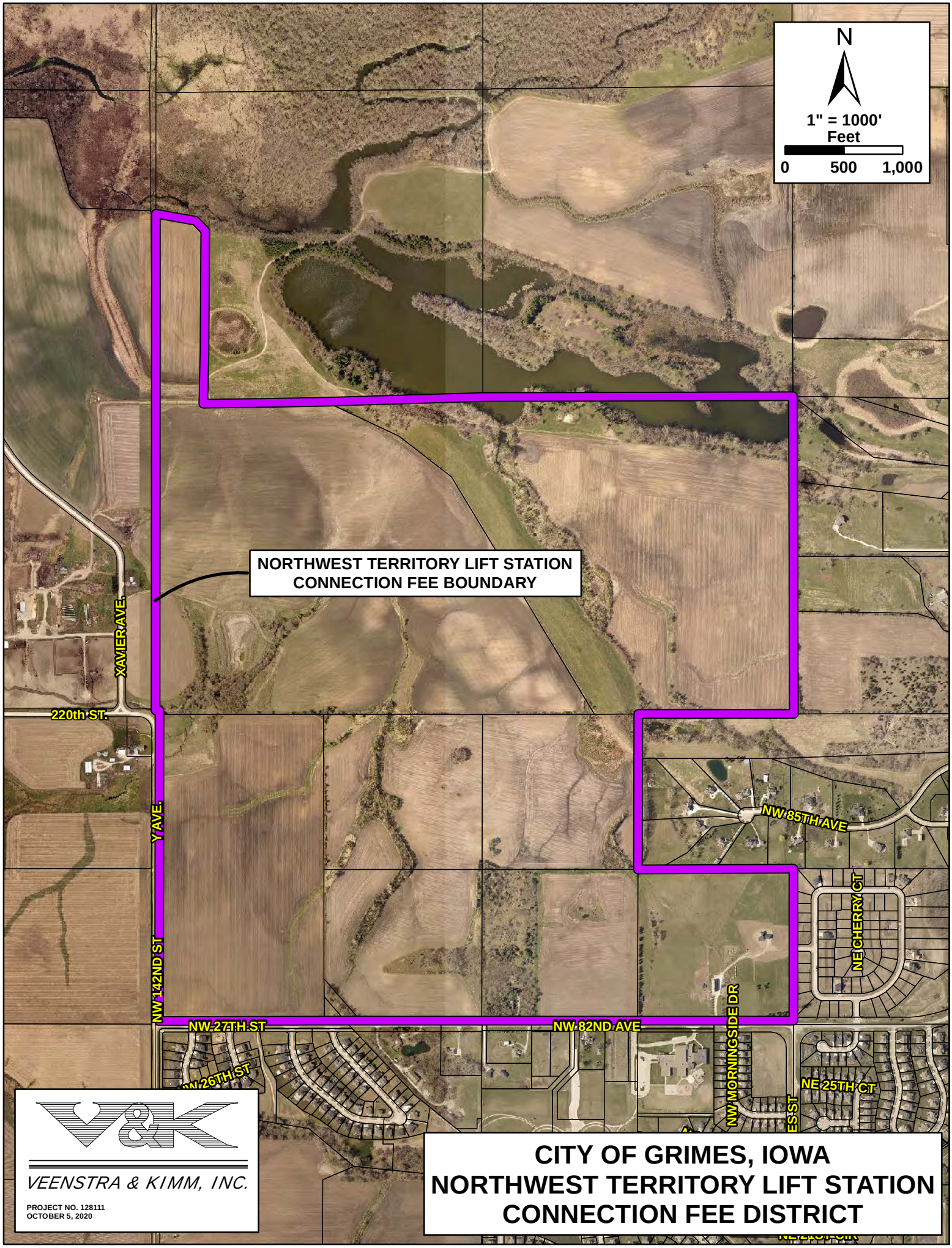
N
1" = 1000'
Feet
0
500
1,000
NORTHWEST TERRITORY LIFT STATION
CONNECTION FEE BOUNDARY
XAVIER AVE.
220th ST.
Y AVE.
NW 142ND ST
NW 27TH ST
NW 82ND AVE
NW 85TH AVE
NE CHERRY CT
NW MORNINGSIDE DR
NE 25TH CT
VEENSTRA & KIMM, INC.
PROJECT NO. 128111
OCTOBER 5, 2020
CITY OF GRIMES, IOWA
NORTHWEST TERRITORY LIFT STATION
CONNECTION FEE DISTRICT

ORDINANCE NO. _____

AN ORDINANCE AMENDING THE CITY CODE OF THE CITY OF GRIMES, IOWA BY ADDING A NEW CONNECTION FEE DISTRICT UNDER CHAPTER 118 UTILITY CONNECTION FEE DISTRICTS

WHEREAS, on the____ day of _____, 2020 the City Council passed Ordinance No. ___ , an ordinance to the municipal code of the City of Grimes, Iowa by adding and enacting thereto a new section relating to the procedure to be utilized in establishing connection fee districts and connection fees to recover the costs of constructing major sanitary sewer facilities, and

WHEREAS, upon due notice and hearing the City Council finds that the general health and welfare of the community will be benefited by the establishment of a new major sanitary sewer facility financed by creation of sewer connection fee district of an area located north of NW 27' Street between N James Street and NW 142n^{d} Street (the "Northwest Territory Lift Station Connection Fee District").

NOW THEREFORE, BE IT ORDAINED BY THE CITY COUNCIL OF THE CITY OF GRIMES, POLK COUNTY, IOWA AS FOLLOWS:

Section 1 Utility Connection Fee District. The Code of Ordinances is amended by adding the following:

<u>118.09 NORTHWEST TERRITORY LIFT STATION CONNECTION FEE DISTRICT</u>

1. Connection Fee District. The Northwest Territory Lift Station Connection Fee District is hereby established consisting of a tract of land located in Sections 19 and 30, Township 80 North, Range 25 West of the ^{5th} Principal Meridian, Polk County, Iowa, more particularly described as follows:

   Commencing at the east one-quarter corner of Section 30, Township 80 North, Range 25 West of the 5" Principal Meridian; thence west along the south line of the northeast quarter of said Section 30 to the Center of said Section 30; thence west along the south line of the northwest quarter of said Section 30 to the West 1/4 Corner of said Section 30; thence north along the west line of the northwest quarter of said Section 30 to the Northwest Corner of said Section 30; thence north along the west line of Section 19, Township 80 North, Range 25 West of the 5th Principal Meridian a distance of 4,260.94 feet; the southeasterly a distance of 463.2 feet; thence south a distance of 1,478.17 feet to a point on the north line of the southwest quarter of said Section 19; thence east along the north line of the southwest quarter of said Section 19 to the Center of said Section 19; thence east along the north line of the southeast quarter of said Section 19 to the East 1/4 Corner of said Section 19; thence south along the east line of the southeast quarter of said

Section **19** to the Southeast Corner of said Section 19; thence west along the north line of the northeast quarter of Section 30, Township 80 North, Range 25 West of the 5' Principal Meridian to the northeast corner of the northwest quarter of the northeast quarter of said Section 30; thence south along the east line of the northwest quarter of the northeast quarter of said Section 30 to the southeast corner of the northwest quarter of the northeast quarter of said Section 30; thence east along the north line of the southeast quarter of the northeast quarter of said Section 30 to the northeast corner of the southeast quarter of the northeast quarter of said Section 30; thence south along the east line of the northeast quarter of said Section 30 to the Point of Beginning.

2. Fee Schedule. From the effective date hereof through **June** 30, 2022 a connection fee of $ _____ per acre shall be imposed. The per acre connection fee shall be adjusted annually as of **July** 1 of each year according to the annual adjustment as provided Section 118.07.

3. Property Outside District. Any property outside of the described connection fee district may connect to the sewer serving the district with the approval of the City Council and payment of the appropriate connection fee. The number of connections to the system is limited and connections outside of the district may not be allowed.

Section 2 Repealer. All ordinances or parts of ordinances in conflict with the provisions of this ordinance are hereby repealed.

Section 3 Severability. If any section, provisions, sentence, clause, phrase or part of this ordinance shall be adjudicated, invalid or unconstitutional, such adjudication shall not affect the validity of the ordinance as a whole or any provision, section, subsection, sentence, clauses, phrase or part hereof not adjudged invalid or unconstitutional.

Section 4 Effective Date. This ordinance shall be in full force and effect following its passage, adoption and publication as required by law.

Passed by the Grimes City Council on the _____ of _____, 2020.

Attest:

_____ _____

Mayor Scott Mikkelsen City Clerk Rochelle Williams

101 NE Harvey, Grimes, Iowa 50111
515.986.3036 Fax 515.986.3846

AGENDA MEMO

For Meeting of November 10, 2020

AGENDA HEADING: Public Hearing – Northwest Territory Connection Fees

SYNOPSIS:
As noted in previous meetings, the City of Grimes has traditionally not utilized connection fees to assist with the financing of public infrastructure projects that benefit development projects. In the past, these infrastructure projects have either been funded entirely by the City, or burden upon one individual developer.

At the October 27th Council meeting, the City Council passed an ordinance on the Master Connection Fee District. This action allowed for the City to now utilize connection fee districts to assist in the funding of certain infrastructure improvement projects. It is important to note that these connection fees do not come due until development occurs upon the property. The properties within the proposed district may continue to operate and function as they do today, and can be sold or subdivided for the purposes of a land transaction, without the fees coming due. Once the property is approved for development (Final Plat), the fees will become due for the area being platted.

As you are all aware, the City has retained Veenstra & Kimm to develop plans for a lift station and trunk sewer that would serve Northwest Territory. This lift station will provide immediate service to the Willow Hills Development, which was recently annexed and recently obtained approval for Rezoning and Preliminary Plat. In addition to the Willow Hills development, an additional 575 acres of development is now serviceable with sanitary sewer.

Veenstra & Kimm is nearing completion of the preliminary plans, and an opinion of cost associated with the sewer improvements. Staff has anticipated since conception that this particular sewer shall be subject to a connection fee. Based upon the service area and costs, the following connection fees are recommended to be established.

Lift Station Connection Fee:
Total Cost = $1,368,000
Service Area = 633 Acres
City Share: 30%

101 NE Harvey, Grimes, Iowa 50111
515.986.3036 Fax 515.986.3846

Connection Fee: $1,513.00/Acre

Trunk Sewer Connection Fee:
Total Cost = $476,160
Service Area = 195
City Share: 0%
Connection Fee: $2,442/Acre

Staff has published and mailed the appropriate notices and has had conversations with most of the property owners impacted. No written communication has been received.

FISCAL IMPACT:
N/A

PREVIOUS COUNCIL ACTION(S):
Approval of the Master Connection Fee Ordinance - 2020

BOARD/COMMISSION ACTION(S):
N/A

STAFF/COMMITTEE RECOMMENDATION:
Staff would recommend approval of the first consideration of Ordinance 745 and Ordinance 746

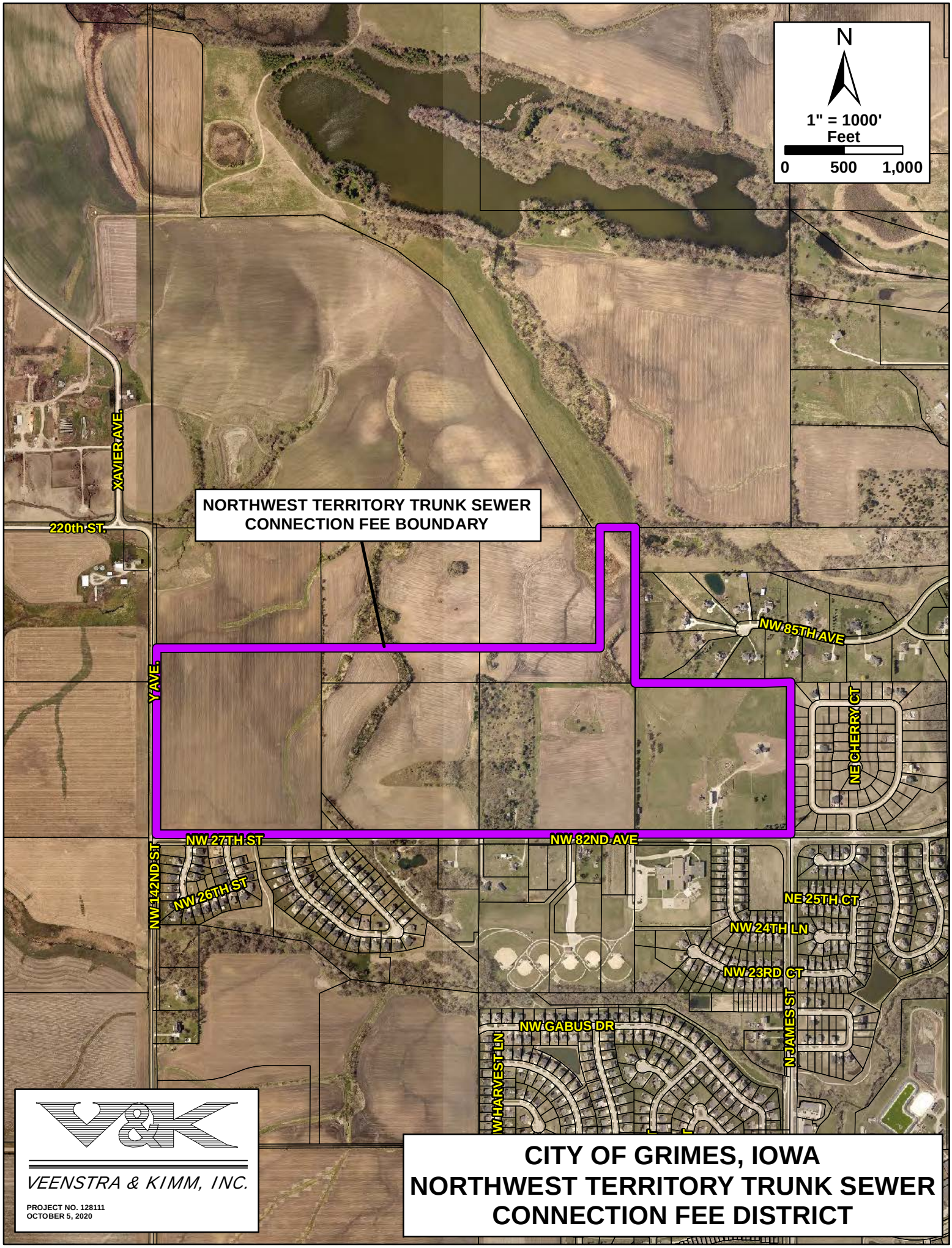

VEENSTRA & KIMM, INC.

PROJECT NO. 128111
OCTOBER 5, 2020

CITY OF GRIMES, IOWA
NORTHWEST TERRITORY TRUNK SEWER CONNECTION FEE DISTRICT

ORDINANCE NO. _____

AN ORDINANCE AMENDING THE CITY CODE OF THE CITY OF GRIMES, IOWA BY ADDING A NEW CONNECTION FEE DISTRICT UNDER CHAPTER 118 UTILITY CONNECTION FEE DISTRICTS

WHEREAS, on the ___ day of _____, 2020 the City Council passed Ordinance No. ___ , an ordinance to the municipal code of the City of Grimes, Iowa by adding and enacting thereto a new section relating to the procedure to be utilized in establishing connection fee districts and connection fees to recover the costs of constructing major sanitary sewer facilities, and

WHEREAS, upon due notice and hearing the City Council finds that the general health and welfare of the community will be benefited by the establishment of new major sanitary sewer facility financed by creation of a sewer connection fee district of an area located north of NW 27' Street between N James Street and NW 142n^{d} Street (the "Northwest Territory Trunk Sewer Connection Fee District").

NOW THEREFORE, BE IT ORDAINED BY THE CITY COUNCIL OF THE CITY OF GRIMES, POLK COUNTY, IOWA AS FOLLOWS:

Section 1 Utility Connection Fee Districts. The Code of Ordinances is amended by adding the following:

<u>118.10 NORTHWEST TERRITORY TRUNK SEWER CONNECTION FEE DISTRICT</u>

1. Connection Fee District. The Northwest Territory Trunk Sewer Connection Fee District is hereby established consisting of a tract of land located in Section 30, Township 80 North, Range 25 West of the 5th Principal Meridian, Polk County, Iowa, more particularly described as follows:

   Commencing at the East 1/4 corner of Section 30, Township 80 North, Range 25 West of the 5th Principal Meridian; thence west along the south line of the northeast one-quarter of said Section 30 to the Center of said Section 30; thence west along the south line of the northwest one-quarter of said Section 30; to the West 1/4 corner of said Section 30; thence north along the west line of the southwest quarter of the northwest one-quarter said Section 30 to the northwest corner of the southwest quarter of the northwest quarter of said Section 30; thence north along the west line of the northwest quarter of the northwest quarter of said Section 30 to a point 300 feet north of the southwest quarter of the northwest quarter of the northwest quarter of said Section 30; thence east to a point on the east line of the northwest quarter of the northwest quarter of said Section 30 said point being located 300 feet north of the southeast quarter of the northwest quarter of the northwest quarter of said Section 30; thence east to a point on the east line of the

northeast quarter of the northwest quarter of said Section 30 said point being located a distance of 300 feet north of the southeast quarter of the northeast quarter of the northwest quarter of said Section 30; thence east along a line parallel to and 300 feet north of the south line of the northwest quarter of the northwest quarter of said Section 30 to a point 300 feet west of the east line of the northwest quarter of the northeast quarter of said Section 30, said point being located 300 feet north of the south line of the northwest quarter of the northeast quarter of said Section 30; thence north to a point on the north line of the northwest quarter of the northeast quarter of said Section 30, said point being 300 feet west of the northeast corner of the northwest quarter of the northeast quarter of said Section 30; thence east along the north line of the northwest quarter of the northeast quarter of said Section 30 to the northeast corner of the northwest quarter of the northeast quarter of said Section 30; thence south along the east line of the northwest quarter of the northeast quarter of said Section 30 to the southeast corner of the northwest quarter of the northeast quarter of said Section 30; thence east along the north line of the southeast quarter of the northeast quarter of said Section 30 to the northeast corner of the southeast quarter of the northeast quarter of said Section 30; thence south along the east line of the southeast quarter of the northeast quarter of said Section 30, to the Point of Beginning.

2. Fee Schedule. From the effective date through June 30, 2022 a connection fee of $ _____per acre shall be imposed. The per acre connection fee shall be adjusted annual as of July **1** of each year according to the annual adjustment as provided in Section 118.07.

3. Property Outside District. Any property outside of the described connection fee district may connect to the sewer serving the district with the approval of the City Council and payment of the appropriate connection fee. The number of connections to the system is limited and connections outside of the district may not be allowed.

4. Overlay District. The Northwest Territory Trunk Sewer Connection Fee District encompasses a portion of the Northwest Territory Lift Station Connection Fee District. Property located within the Northwest Territory Trunk Sewer Connection Fee District shall also be submit to the Northwest Territory Lift Station Connection Fee District. The Northwest Territory Trunk Sewer Connection Fee is established in addition to the Northwest Territory Lift Station Connection Fee District.

Section 2 Repealer. All ordinances or parts of ordinances in conflict with the provisions of this ordinance are hereby repealed.

Section 3 Severability. If any section, provisions, sentence, clause, phrase or part of this ordinance shall be adjudicated, invalid or unconstitutional, such adjudication shall not affect the validity of the ordinance as a whole or any provision, section, subsection, sentence, clauses, phrase or part hereof not adjudged invalid or unconstitutional.

Section 4 Effective Date. This ordinance shall be in full force and effect following its passage, adoption and publication as required by law.

Passed by the Grimes City Council on the _____ of _____, 2020.

Attest:

_____ _____

Mayor Scott Mikkelsen City Clerk Rochelle Williams

HEARING ON AND APPROVAL OF NOVEMBER, 2020 AMENDMENT TO THE GRIMES URBAN RENEWAL AREA

419952-79

Grimes, Iowa

November 10, 2020

The City Council of the City of Grimes, Iowa, met on November 10, 2020, at 5:30 o'clock, p.m., at the Grimes Community Complex, 410 SE Main Street, Grimes, Iowa, for the purpose of conducting a public hearing on a proposed urban renewal plan amendment.

The City Council meeting was alternatively accessible electronically via Zoom at the following:

https://zoom.us/j/91682130634

Passcode 483932

The City Council offered attendance to this meeting electronically due to federal and state government recommendations in response to COVID-19 pandemic conditions. Electronic access information was included in the posted agenda of this public meeting.

The Mayor presided and the roll being called the following members of the Council were present and absent:

Present: _____

Absent: _____.

The City Council investigated and found that notice of the intention of the Council to conduct a public hearing on the urban renewal plan amendment had been published according to law and as directed by the Council and that this is the time and place at which the Council shall receive oral or written objections from any resident or property owner of the City. All written objections, statements, and evidence heretofore filed were reported to the City Council, and all oral objections, statements, and all other exhibits presented were considered.

The following named persons presented oral objections, statements, or evidence as summarized below; filed written objections or statements, copies of which are attached hereto; or presented other exhibits, copies of which are attached hereto:

(Here list all persons presenting written or oral statements or evidence and summarize each presentation.)

There being no further objections, comments, or evidence offered, the Mayor announced the hearing closed.

Council Member _____ moved the adoption of a resolution entitled "Resolution to Approve Urban Renewal Plan Amendment for the Grimes Urban Renewal Area," seconded by Council Member _____. After due consideration, the Mayor put the question on the motion and the roll being called, the following named Council Members voted:

Ayes: _____

Nays: _____.

Whereupon, the Mayor declared the resolution duly adopted and signed approval thereto.

RESOLUTION NO.11-0120

Resolution to Approve Urban Renewal Plan Amendment for the Grimes Urban Renewal Area

WHEREAS, as a preliminary step to exercising the authority conferred upon Iowa cities by Chapter 403 of the Code of Iowa (the "Urban Renewal Law"), a municipality must adopt a resolution finding that one or more slums, blighted or economic development areas exist in the municipality and that the rehabilitation, conservation, redevelopment, development or a combination thereof, of such area or areas is necessary in the interest of the public health, safety or welfare of the residents of the municipality; and

WHEREAS, this City Council of the City of Grimes, Iowa (the "City"), by prior resolution established the Grimes Urban Renewal Area (the "Urban Renewal Area") and adopted an urban renewal plan (the "Plan") for the governance of projects and initiatives therein; and

WHEREAS, an amendment (the "Amendment") to the Plan has been prepared which authorizes the undertaking of a new urban renewal project (the "Project") in the Urban Renewal Area consisting of using tax increment financing to pay the costs of the City's Urban Renewal Administration and Professional Support Program; and

WHEREAS, notice of a public hearing by the City Council on the proposed Amendment was heretofore given in strict compliance with the provisions of Chapter 403 of the Code of Iowa, and the Council has conducted said hearing on November 10, 2020; and

WHEREAS, copies of the Amendment, notice of public hearing and notice of a consultation meeting with respect to the Amendment were mailed to Polk County and the Dallas Center-Grimes Community School District; the consultation meeting was held on the 19th day of October, 2020; and responses to any comments or recommendations received following the consultation meeting were made as required by law;

NOW, THEREFORE, It Is Resolved by the City Council of the City of Grimes, Iowa, as follows:

Section 1. The Amendment, attached hereto and made a part hereof, is hereby in all respects approved.

Section 2. It is hereby determined by this City Council as follows:

A. The Project proposed under the Amendment conforms to the general plan for the development of the City;

B. The Project proposed under the Amendment is necessary and appropriate to facilitate the proper growth and development of the City in accordance with sound planning standards and local community objectives.

C. It is not intended that families will be displaced as a result of the City's undertaking under the Amendment. Should such issues arise with future projects, then the City

will ensure that a feasible method exists to carry out any relocations without undue hardship to the displaced and into safe, decent, affordable and sanitary housing.

Section 3. All resolutions or parts thereof in conflict herewith are hereby repealed, to the extent of such conflict.

Passed and approved November 10, 2020.

_____
Mayor Scott Mikkelsen

Attest:

_____
City Clerk Rochelle Williams

(Attach copy of the urban renewal plan amendment to this resolution.)

• • • •

Upon motion and vote, the meeting adjourned.

_____
Mayor Scott Mikkelsen

Attest:

_____
City Clerk Rochelle Williams

CITY OF GRIMES, IOWA

URBAN RENEWAL PLAN AMENDMENT
GRIMES URBAN RENEWAL AREA

November, 2020

The Urban Renewal Plan (the "Plan") for the Grimes Urban Renewal Area (the "Urban Renewal Area") is being amended for the purpose of identifying a new urban renewal project to be undertaken therein.

1) Identification of Projects. By virtue of this amendment, the list of authorized urban renewal projects in the Plan is hereby amended to include the following project description:

A.

Name of Project: 2021-2025 Urban Renewal Administration and Professional Support Program

Name of Urban Renewal Area: Grimes Urban Renewal Area

Date of Council Approval of Program: November 10, 2020

Description of Program: The City will provide administrative and professional support to its urban renewal projects and initiatives in the City's 2021 through 2025 fiscal years (the "Admin Support Program"). The Admin Support Program will include planning, staffing, grant writing and administration, document support, record management, accounting, marketing, legal services and such other services as are necessary to carry out and effectuate the urban renewal initiatives and objectives of the City. In addition, under the Admin Support Program, the City will continue to provide economic development support payments to the Grimes Chamber of Commerce (the "Chamber") in connection with the Chamber's efforts to promote economic development in the Urban Renewal Area.

Description of Use of TIF for the Program: The City will fund the Admin Support Program from the proceeds of internal advances (the "Advances") of cash on hand. The City's annual contributions will be determined from year to year. The City will repay the Advances from incremental property tax revenues to be derived from the Urban Renewal Area. The amount of the Advances will be determined from year to year. The total amount of incremental property tax revenues to be applied to the City's Admin Support Program for the City's fiscal years 2021 through 2025 shall not exceed $2,150,000.

2) Required Financial Information. The following information is provided in accordance with the requirements of Section 403.17 of the Code of Iowa:

Constitutional debt limit of the City:	$81,784,269
Outstanding general obligation debt of the City:	$
Proposed maximum indebtedness to be incurred in connection with this November, 2020 Amendment:*	$ 2,150,000

*It is anticipated that some or all of the debt incurred hereunder will be subject to annual appropriation by the City Council.

STATE OF IOWA
COUNTIES OF DALLAS AND POLK SS:
CITY OF GRIMES

I, the undersigned, do hereby certify that I am the duly appointed, qualified and acting City Clerk of the City of Grimes, and that as such I have in my possession or have access to the complete corporate records of the City and of its officers; and that I have carefully compared the transcript hereto attached with the aforesaid records and that the attached is a true, correct and complete copy of the corporate records relating to the action taken by the City Council preliminary to and in connection with approving the urban renewal plan amendment for the Grimes Urban Renewal Area in the City of Grimes, Iowa.

WITNESS MY HAND this ____ day of _____, 2020.

_____
City Clerk Rochelle Williams

MINUTES PROVIDING FOR ADOPTION OF RESOLUTION APPROVING INTERNAL ADVANCE

419952-79

Grimes, Iowa

November 10, 2020

The City Council of the City of Grimes, Iowa met on November 10, 2020, at 5:30 o'clock p.m., at the Grimes Community Complex, 410 SE Main Street, Grimes, Iowa. The City Council meeting was alternatively accessible electronically via Zoom at the following:

https://zoom.us/j/91682130634

Passcode 483932

The City Council offered attendance to this meeting electronically due to federal and state government recommendations in response to COVID-19 pandemic conditions. Electronic access information was included in the posted agenda of this public meeting.

The meeting was called to order by the Mayor, and the roll was called showing the following Council Members present and absent:

Present: Altringer, Johansen, Burger, Gisch, Borcherding

Absent: None

After due consideration and discussion, Council Member _____ introduced the following resolution and moved its adoption, seconded by Council Member _____. The Mayor put the question upon the adoption of said resolution, and the roll being called, the following Council Members voted:

Ayes: _____

Nays: _____.

Whereupon, the Mayor declared the resolution duly adopted, as hereinafter set out.

• • • •

At the conclusion of the meeting and upon motion and vote, the City Council adjourned.

_____
Mayor Scott Mikkelsen

Attest:

_____
City Clerk Rochelle Williams

RESOLUTION NO 11-0220

Resolution Authorizing Internal Advance for Funding of Urban Renewal Administration and Professional Support Program

WHEREAS, the City of Grimes, Iowa (the "City"), has previously established the Grimes Urban Renewal Area (the "Urban Renewal Area") and has established the Grimes Urban Renewal Area Tax Increment Revenue Fund (the "Tax Increment Fund") in connection therewith; and

WHEREAS, the City has authorized the Urban Renewal Administration and Professional Support Program (the "Admin Support Program"); and

WHEREAS, costs (the "Program Costs") have been and will be incurred in connection with the undertaking of the Admin Support Program; and

WHEREAS, in order to cover a portion of the Program Costs and to make such Program Costs eligible to be recouped from incremental property tax revenues, it is necessary to facilitate an internal advance (the "Advance") of funds;

NOW, THEREFORE, IT IS RESOLVED by the City Council of the City of Grimes, Iowa, as follows:

Section 1. It is hereby directed that an amount not in excess of Four Hundred Three Thousand Dollars ($403,000) be advanced (the "Advance") from the General Fund (the "Source Fund") in order to fund a portion of the Admin Support Program. The Admin Support Program shall be repaid to the Source Fund, with interest thereon at the per annum rate of 3.00%, out of incremental property tax revenues received with respect to the Urban Renewal Area. Interest shall be calculated from November 1, 2020 and shall be computed on the basis of the actual 365-day calendar year.

It is intended that the Advance shall be repaid in one (l) annual installment of principal of and interest on the Advance in the amount of $415,090 on or before June 1, 2022, provided however that repayment of the Advance is subject to the determination of future City Councils that there are incremental property tax revenues available for such purpose which have been allocated to or accrued in the Tax Increment Fund relative to the Advance, and the City Council reserves the right to appropriate funds to the repayment of the Advance, or to withhold such appropriation, at its discretion. All payments made will be applied first to accrued interest, and then to the Advance.

Section 2. A copy of this Resolution shall be filed in the office of the County Auditor of Polk County, Iowa to evidence the Advance described herein. Pursuant to Section 403.19 of the Code of Iowa, the City Clerk is hereby directed to certify, no later than December 1, 2020, the full amount of the Advance.

Section 3. All resolutions or parts thereof in conflict herewith, are hereby repealed, to the extent of such conflict.

PASSED AND APPROVED this November 10, 2020.

_____
Mayor Scott Mikkelsen

Attest:

_____
City Clerk Rochelle Williams

JOHNSTON-GRIMES METROPOLITAN FIRE DEPARTMENT
6373 MERLE HAY RD.
JOHNSTON, IOWA 50131

October 2020 service calls

245 calls across all districts

Total calls **Down** from 271 total in September

Station 37 – 62 calls

Station 38 – Grimes district – 34 Johnston district – 54

Station 39 – 85 calls

Mutual Aid Given– 10 calls Granger – 4 Saylor Township – 4 Urbandale - 2
Mutual Aid Received – 11 agency responses

EMS calls (184) – 81.22% Fire/other calls (61) – 18.78%

8 in Category 1, 4 Building Fire, 4 other types of fires like rubbish.
3 in Category 2 Excessive Heat, no ignition
9in Category 4 Hazardous Condition which is gas leaks, chemical spills, power lines down.
11 Service Calls which is Category 5, 8 of these were EMS
13 in Category 6 Good Intent - 9 were EMS Calls
14 False Alarms- which is Category 7

1 in Category 9 – Special Incident Type- 1 citizen complaint

Major incidents to report in JGMFD districts or involving JGMFD Units
On 10/4 Commercial Fire in Granger District- 66' x 582' Chicken laying barn with office. Total loss.

On 10/5 Rekindle of Chicken barn, assisted Granger with water.

On 10/12 Commercial Fire at Ryko in Grimes. Metal fire near cutting machine. Lots of smoke, but small fire.

On 10/15 House fire at 7082 Ridgedale Ct., Johnston. It was in the attic before arrival and burnt most of the roof off. Extensive fire and water damage,

Items of interest:
Call volume ahead of last year. End of January we were projecting 126 more calls than last year. End of February projections were for 108 more. End of March we were projecting 57 fewer calls than 2019. At the end of May we were projecting 56 fewer calls than last year. End of June we were 30 calls behind last year. Now we are projecting 100 more calls than last year by the end of the year. This will put us over 3,000 if we continue this same pace.

Grimes - Arrest Counts

Total: 14 People Arrested With 30 Charges

People Arrested With Highest Charge - Grimes			
Year	Month	Charge	Count
2020	Oct	ASSAULT CAUSING BODILY INJURY OR MENTAL ILLNESS	1
		DOMESTIC ABUSE ASSAULT CAUSE BODILY INJURY/MENTAL ILLNESS	2
		DOMESTIC ABUSE ASSAULT IMPEDING AIR/BLOOD FLOW CAUSING BODIL	1
		DRIVING WHILE BARRED - HABITUAL OFFENDER	2
		OPERATING WHILE UNDER THE INFLUENCE 1ST OFFENSE	2
		POSSESSION OF A CONTROLLED SUBSTANCE	1
		THEFT 1ST DEGREE	2
		THEFT 5TH DEGREE -- Other Means Under $200	1
		VIOLATION OF NO CONTACT / PROTECTIVE ORDER	1
		VIOLATION OF PROBATION - 1985 VIOLATION OF PROBATION - 1985	1
		Month Total	*14*
	Year Total		14

All Arrest Charges - Grimes			
Year	Month	Charge	Charge Count
2020	Oct	ASSAULT CAUSING BODILY INJURY OR MENTAL ILLNESS	1
		CHILD ENDANGERMENT -- Substantial Risk	2
		DOMESTIC ABUSE ASSAULT CAUSE BODILY INJURY/MENTAL ILLNESS	2
		DOMESTIC ABUSE ASSAULT IMPEDING AIR/BLOOD FLOW CAUSING BODIL	1
		DRIVING WHILE BARRED - HABITUAL OFFENDER	4
		DRIVING WHILE BARRED HABITUAL OFFENDER	1
		DRIVING WHILE LICENSE DENIED OR REVOKED (SRMS)	1
		FAILURE TO PROVIDE PROOF OF FINANCIAL LIABILITY No Accident	1
		HARASSMENT 1ST DEGREE	1
		ONGOING CRIMINAL CONDUCT - UNLAWFUL ACTIVITY	1
		OPEN CONTAINER - DRIVER 21 YRS OLD AND OLDER Open Container	1
		OPERATING WHILE UNDER THE INFLUENCE 1ST OFFENSE	3
		POSSESSION OF A CONTROLLED SUBSTANCE	1
		POSSESSION OF DRUG PARAPHERNALIA (SMMS)	1
		PROBATION VIOLATION	1
		THEFT 1ST DEGREE	2
		THEFT 5TH DEGREE -- Other Means Under $200	1
		VIOLATION OF NO CONTACT / PROTECTIVE ORDER	1
		VIOLATION OF PROBATION - 1985	1
		VIOLATION OF PROBATION - 1985 VIOLATION OF PROBATION - 1985	3
		Month Total	*30*
	Year Total		30

Grimes - Arrests Detail List

Report Month: October 2020

Total: 12 People Arrested With 30 Charges

ARRE ID	CaseID/ ArrDate/ Chrg Seq	BookId/ Time Arr/ Fel/Misd	Name/ DOW/ Chrg Type	Arr Type/ Arr Chrg	Race/ Arr Add/ Charge	Ethnic	Sex	Arr Age
20002948	**20005901**	**318901**	**KEELING, CODY**		**W**	**N**	**M**	**34**
	10/01/2020	0000	Thursday	ON-VIEW ARREST	1250 SE 11TH ST , GRIMES			
	1	F	S	708.2A(5)	DOMESTIC ABUSE ASSAULT IMPEDING AIR/BLOOD FLOW CAUSING BODIL			
	10/01/2020	0000	Thursday	ON-VIEW ARREST	1250 SE 11TH ST , GRIMES			
	2	M	S	726.6(7)	CHILD ENDANGERMENT -- Substantial Risk			
	10/01/2020	0000	Thursday	ON-VIEW ARREST	1250 SE 11TH ST , GRIMES			
	3	M	S	726.6(7)	CHILD ENDANGERMENT -- Substantial Risk			
	10/01/2020	0000	Thursday	ON-VIEW ARREST	1250 SE 11TH ST , GRIMES			
	4	M	S	708.7(2)	HARASSMENT 1ST DEGREE			
	10/01/2020	0000	Thursday	ON-VIEW ARREST	1250 SE 11TH ST , GRIMES			
	5	M	S	908.11	PROBATION VIOLATION			
20002983	**20006036**	**319060**	**ROSBURG, KHAEL**		**W**	**N**	**M**	**28**
	10/06/2020	2114	Tuesday	TAKEN INTO CUSTODY	1109 NW GABUS CIR , GRIMES			
	1	F	S	714.2(1)	THEFT 1ST DEGREE			
	10/06/2020	2114	Tuesday	TAKEN INTO CUSTODY	1109 NW GABUS CIR , GRIMES			
	2	F	S	706A.2(4)	ONGOING CRIMINAL CONDUCT - UNLAWFUL ACTIVITY			
20002985	**20006042**	**319074**	**MERCER, DALE**		**W**	**N**	**M**	**28**
	10/07/2020	0258	Wednesday	ON-VIEW ARREST	3103 SE COVENANT DR , GRIMES			
	2	M	S	908.11	VIOLATION OF PROBATION - 1985			

ARRE ID	CaseID/ ArrDate/ Chrg Seq	BookId/ Time Arr/ Fel/Misd	Name/ DOW/ Chrg Type	Arr Type/ Arr Chrg	Race/ Arr Add/ Charge	Ethnic	Sex	Arr Age
	10/07/2020	0258	Wednesday	ON-VIEW ARREST	3103 SE COVENANT DR , GRIMES			
	1	M	S	708.2A(2)(B)	DOMESTIC ABUSE ASSAULT CAUSE BODILY INJURY/MENTAL ILLNESS			
20003008	**20006075**	**319138**	**ARMSTEAD, STEVEN**		**B**	**N**	**M**	**31**
	10/08/2020	1115	Thursday	ON-VIEW ARREST	209 NW 8TH ST 25, GRIMES			
	1	M	S	664A.7	VIOLATION OF NO CONTACT / PROTECTIVE ORDER			
20003014	**20006091**	**319176**	**MASON, THOMAS**		**W**	**N**	**M**	**54**
	10/09/2020	0019	Friday	TAKEN INTO CUSTODY	200 S JAMES ST , GRIMES			
	1	M	S	708.2A(2)(B)	DOMESTIC ABUSE ASSAULT CAUSE BODILY INJURY/MENTAL ILLNESS			
20003020	**20006107**	**319221**	**HOUGHTALING, ROBERT**		**W**	**N**	**M**	**32**
	10/10/2020	0122	Saturday	ON-VIEW ARREST	2600-B SE ENTERPRISE DR , GRIMES			
	1	F	S	714.2(1)	THEFT 1ST DEGREE			
	10/10/2020	0122	Saturday	ON-VIEW ARREST	2600-B SE ENTERPRISE DR , GRIMES			
	2	M	S	124.414	POSSESSION OF DRUG PARAPHERNALIA (SMMS)			
	10/10/2020	0122	Saturday	ON-VIEW ARREST	2600-B SE ENTERPRISE DR , GRIMES			
	3	M	S	321.561	DRIVING WHILE BARRED HABITUAL OFFENDER			
20003029	**20006084**	**0**	**GONZALEZ RIOS, GERARDO**		**U**	**N**	**M**	**21**
	10/08/2020	1854	Thursday	SUMMONED/ CITED	2150 E 1ST ST , GRIMES			
	1	M	S	714.2(5)	THEFT 5TH DEGREE -- Other Means Under $200			
20003070	**20006202**	**319425**	**HARRIS, RODRICK**		**B**	**N**	**M**	**24**
	10/14/2020	1551	Wednesday	ON-VIEW ARREST	3700-B SE GRIMES BLVD , GRIMES			
	1	M	S	321.561	DRIVING WHILE BARRED - HABITUAL OFFENDER			

ARRE ID	CaseID/ ArrDate/ Chrg Seq	BookId/ Time Arr/ Fel/Misd	Name/ DOW/ Chrg Type	Arr Type/ Arr Chrg	Race/ Arr Add/ Charge	Ethnic	Sex	Arr Age
	10/14/2020	1551	Wednesday	ON-VIEW ARREST	3700-B SE GRIMES BLVD , GRIMES			
	2	M	S	321.561	DRIVING WHILE BARRED - HABITUAL OFFENDER			
	10/14/2020	1551	Wednesday	ON-VIEW ARREST	3700-B SE GRIMES BLVD , GRIMES			
	3	M	S	321.20B	FAILURE TO PROVIDE PROOF OF FINANCIAL LIABILITY No Accident			
20003078	**20005982**	**0**	**GUIDEBECK, CAYDEN**		**W**	**N**	**M**	**16**
	10/04/2020	2021	Sunday	SUMMONED/ CITED	811 SE CROSSINGS LN , GRIMES			
	1	M	S	708.2(2)	ASSAULT CAUSING BODILY INJURY OR MENTAL ILLNESS			
20003101	**20006246**	**319552**	**BRENDELAND, ALLEN**		**W**	**N**	**M**	**37**
	10/17/2020	0331	Saturday	ON-VIEW ARREST	1905 SE 37TH ST , GRIMES			
	1	M	S	321J.2(2)(a)	OPERATING WHILE UNDER THE INFLUENCE 1ST OFFENSE			
	10/17/2020	0331	Saturday	ON-VIEW ARREST	1905 SE 37TH ST , GRIMES			
	3	M	S	321J.21	DRIVING WHILE LICENSE DENIED OR REVOKED (SRMS)			
	10/17/2020	0331	Saturday	ON-VIEW ARREST	1905 SE 37TH ST , GRIMES			
	2	M	S	321J.2(2)(a)	OPERATING WHILE UNDER THE INFLUENCE 1ST OFFENSE			
20003103	**20006256**	**319570**	**BROOKS, DEVIN**		**W**	**N**	**M**	**28**
	10/17/2020	2031	Saturday	ON-VIEW ARREST	951 SE GATEWAY DR , GRIMES			
	1	M	S	321J.2(2)(a)	OPERATING WHILE UNDER THE INFLUENCE 1ST OFFENSE			
	10/17/2020	2031	Saturday	ON-VIEW ARREST	951 SE GATEWAY DR , GRIMES			
	2	M	S	321.284	OPEN CONTAINER - DRIVER 21 YRS OLD AND OLDER Open Container			
20003199	**20006412**	**0**	**PHILIPS, ELIJAH**		**B**	**N**	**M**	**22**
	10/24/2020	1832	Saturday	SUMMONED/ CITED	1900 SE 37TH ST , GRIMES			
	1	M	S	124.401(5)	POSSESSION OF A CONTROLLED SUBSTANCE			

ARRE ID	CaseID/ ArrDate/ Chrg Seq	BookId/ Time Arr/ Fel/Misd	Name/ DOW/ Chrg Type	Arr Type/ Arr Chrg	Race/ Arr Add/ Charge	Ethnic	Sex	Arr Age
20003228	**20006521**	**320108**	**HARVEY, DALE**		**W**	**N**	**M**	**33**
	10/28/2020	1643	Wednesday	ON-VIEW ARREST	W 1ST ST / NW CALISTA CT , GRIMES			
	1	M	S	321.561	DRIVING WHILE BARRED - HABITUAL OFFENDER			
	10/28/2020	1643	Wednesday	ON-VIEW ARREST	W 1ST ST / NW CALISTA CT , GRIMES			
	2	M	S	321.561	DRIVING WHILE BARRED - HABITUAL OFFENDER			
20003230	**20006529**	**320130**	**RUNNER, ANTHONY**		**W**	**N**	**M**	**33**
	10/29/2020	0230	Thursday	TAKEN INTO CUSTODY	5150 NE 100TH ST , GRIMES			
	1	F	S	908.11	VIOLATION OF PROBATION - 1985 VIOLATION OF PROBATION - 1985			
	10/29/2020	0230	Thursday	TAKEN INTO CUSTODY	5150 NE 100TH ST , GRIMES			
	2	F	S	908.11	VIOLATION OF PROBATION - 1985 VIOLATION OF PROBATION - 1985			
	10/29/2020	0230	Thursday	TAKEN INTO CUSTODY	5150 NE 100TH ST , GRIMES			
	3	F	S	908.11	VIOLATION OF PROBATION - 1985 VIOLATION OF PROBATION - 1985			

Grimes - Calls For Service Counts

Year	Month	Naturecode	CFS
2020	Oct	ABAND	2
		ACCIDENT	27
		ANIMAL	25
		ASSAULT	2
		ASSIST	70
		ATL	3
		AUDIBLE	25
		BUILDING	121
		BURG	4
		CHINA	6
		COMMFIRE	4
		DEBRIS	6
		DISPUTE	14
		DITCH	1
		DOMESTIC	12
		DPQ	16
		FIGHT	1
		FOLLOW	14
		FOUND	5
		FRAUD	9
		HARASS	5
		HAZMAT	3
		HITRUN	5
		INCOMP	12
		INFO	7
		INVESTIG	5
		KEYS	15
		LMV	4
		MENTAL	7
		MESSAGE	2
		MISC	1
		MISSING	2
		NARC	1
		OPEN	5
		OWI	1
		PARK	12
		PROWL	1

2020	Oct	PUBLIC	13
		RADAR	60
		RECKLESS	8
		RESDFIRE	3
		ROADS	2
		ROBBERY	1
		RUNAWAY	1
		SEX	2
		SHOPLIFT	1
		SIGNALS	1
		SILENT	3
		STALLED	15
		STILL	1
		SUSP	37
		THEFT	14
		THREAT	2
		TRAFFIC	149
		TRANSPOR	1
		UNK	1
		VANDAL	3
		WANTED	4
		WATCH	36
		WELFARE	12
		Month Total	***825***
	Year Total		825

Grimes - Calls For Service List

Report Month: October 2020

Total Calls For Service: 825

Call ID	Case ID	Date	Time	Address	Loc Com	Disposition	Officer Name	How Receive	Year	Month	DOW	Hour	Time Disp	Time Arrive	Time Clear	TS Hour	TS Minute
ABAND		**Total = 2**															
20042095		10/01/2020	1137	3060 SE GRIMES BLVD, GRIMES		GREENTAG	BALLENGER, STEVEN	ADMIN	2020	Oct	TH	11	1139	1143	1226	0	47
20043622		10/11/2020	1134	2003 NE HERITAGE DR, GRIMES		GREENTAG	BALLENGER, STEVEN	ADMIN	2020	Oct	SU	11	1138	1155	1201	0	23
ACCIDENT		**Total = 27**															
20042117	20005913	10/01/2020	1539	200-B W 1ST ST, GRIMES		CASE	ARCURI, CHRISTIE	ADMIN	2020	Oct	TH	15	1539	1539	1629	0	50
20042277	20005949	10/02/2020	1623	101 N JAMES ST, GRIMES	: @BREADEAUX PIZZA - GRIM	CASE	BALLENGER, STEVEN	ADMIN	2020	Oct	FR	16	1625	1630	1711	0	46
20042305	20005952	10/02/2020	1906	SE 37TH ST / SE GRIMES BLVD, GRIMES		CASE	DOVE, JEREMY	ANI/ALI	2020	Oct	FR	19	1906	1912	1935	0	29
20042394	20005965	10/03/2020	0954	101 SE GATEWAY DR, GRIMES	: @MCDONALDS - GRIM	ADVISED	KINNEY, PHILIP	ANI/ALI	2020	Oct	SA	9	0955	1002	1113	1	18
20042549	20005980	10/04/2020	1628	E 1ST ST / N JAMES ST, GRIMES		ASSIST	LOWRY, STEVEN	ADMIN	2020	Oct	SU	16	1629	1631	1654	0	25
20043357	20006103	10/09/2020	1500	SE 35TH ST / SE STONEGATE DR, GRIMES		CITATION	ARNOLD, BRYCE	ANI/ALI	2020	Oct	FR	15	1501	1511	1556	0	55
20043618		10/11/2020	1108	SE 11TH ST / SE GRIMES BLVD, GRIMES		ADVISED	KINNEY, PHILIP	ADMIN	2020	Oct	SU	11	1110	1115	1119	0	9

Call ID	Case ID	Date	Time	Address	Loc Com	Disposition	Officer Name	How Receive	Year	Month	DOW	Hour	Time Disp	Time Arrive	Time Clear	TS Hour	TS Minute
20043656	20006127	10/11/2020	1614	3160 SE GRIMES BLVD, GRIMES	: @HICKLIN POWER SPORTS (SUITE 700 A&B) - GRIM	CASE	ARNOLD, BRYCE	ANI/ALI	2020	Oct	SU	16	1615	1618	1643	0	28
20043746	20006137	10/12/2020	0841	1900 SE 37TH ST, GRIMES	: @QT - GRIM	CASE	HAKE, MICHAEL	ADMIN	2020	Oct	MO	8	0845	0854	0939	0	54
20043969	20006179	10/13/2020	1545	2555 W 1ST ST, GRIMES	: @DALLAS CENTER GRIMES HIGH SCHOOL - GRIM	CASE	KRILE, CHALENA	ADMIN	2020	Oct	TU	15	1545	1553	1611	0	26
20044063	20006189	10/14/2020	0854	2900 SW BROOKSIDE DR, GRIMES	: @FED EX GROUND - GRIM	ADVISED	DAUTOVIC, MEVLID	ANI/ALI	2020	Oct	WE	8	0854	0900	0921	0	27
20044101	20006197	10/14/2020	1310	E 1ST ST / N JAMES ST, GRIMES		CASE	DAUTOVIC, MEVLID	ADMIN	2020	Oct	WE	13	1311	1315	1410	0	59
20044102		10/14/2020	1317	200 S JAMES ST, GRIMES	: @JGFD 37	ADVISED	KINNEY, PHILIP	ADMIN	2020	Oct	WE	13	1327	1327	1334	0	7
20044729	20006284	10/18/2020	2056	101 SE GATEWAY DR, GRIMES	: @MCDONALDS - GRIM	CASE	JOHNSON, BRIAN	ADMIN	2020	Oct	SU	20	2057	2104	2138	0	41
20044760		10/19/2020	0659	SE 19TH ST / SE GRIMES BLVD, GRIMES		ASSIST	KINNEY, PHILIP	ADMIN	2020	Oct	MO	6	0659	0714	0725	0	26
20044800	20006297	10/19/2020	1104	NE BEAVERBROOKE BLVD / NE GRIMES BLVD, GRIMES		ASSIST	BALLENGER, STEVEN	ANI/ALI	2020	Oct	MO	11	1104	1109	1135	0	31
20044804		10/19/2020	1117	1450 NE BEAVERBROOKE BLVD, GRIMES	: @KWIK STAR - GRIM	ASSIST	KINNEY, PHILIP	OFFICER	2020	Oct	MO	11	1117	1117	1133	0	16

Call ID	Case ID	Date	Time	Address	Loc Com	Disposition	Officer Name	How Receive	Year	Month	DOW	Hour	Time Disp	Time Arrive	Time Clear	TS Hour	TS Minute
20044848	20006307	10/19/2020	1616	NE BEAVERBROOKE BLVD / NE GRIMES BLVD, GRIMES		CASE	ARNOLD, BRYCE	ADMIN	2020	Oct	MO	16	1621	1726	1726	1	5
20044980	20006333	10/20/2020	1544	NW 142ND ST / NW 70TH AVE, GRIMES		CASE	MAY, JOHN	ANI/ALI	2020	Oct	TU	15	1551	1551	1623	0	32
20045630	20006420	10/25/2020	1247	1900 SE 37TH ST, GRIMES	: @QT - GRIM	CASE	DOVE, JEREMY	ANI/ALI	2020	Oct	SU	12	1247	1253	1422	1	35
20045678	20006429	10/25/2020	2059	NE BEAVERBROOKE BLVD / NE HERITAGE DR, GRIMES		CASE	ARNOLD, BRYCE	ANI/ALI	2020	Oct	SU	20	2100	2106	2240	1	40
20045740		10/26/2020	0836	3013 SE STONE RIDGE ST, GRIMES		ASSIST	BALLENGER, STEVEN	ADMIN	2020	Oct	MO	8	0837	0844	0853	0	16
20046075		10/28/2020	1315	1001 S JAMES ST, GRIMES	: @ST PETERS LUTHERAN CHURCH - GRIM	ADVISED	KINNEY, PHILIP	ADMIN	2020	Oct	WE	13	1316	1321	1353	0	37
20046234	20006540	10/29/2020	1400	2150 E 1ST ST, GRIMES	: @WALMART - GRIM	CASE	AIKEN, JAMIE	ADMIN	2020	Oct	TH	14	1401	1405	1414	0	13
20046253		10/29/2020	1708	SE 33RD ST / SE GRIMES BLVD, GRIMES		ADVISED	MAY, JOHN	ANI/ALI	2020	Oct	TH	17	1708	1713	1716	0	8
20046510	20006581	10/31/2020	0907	100-B E 1ST ST, GRIMES		CASE	MCATEE, JESSE	ANI/ALI	2020	Oct	SA	9	0908	0911	1002	0	54
20046572		10/31/2020	1915	1001 S JAMES ST, GRIMES	: @ST PETERS LUTHERAN CHURCH - GRIM	INFO	ARNOLD, BRYCE	ADMIN	2020	Oct	SA	19	1918	1921	1932	0	14
ANIMAL		**Total = 25**															
20042152		10/01/2020	1931	3700-B S JAMES ST, GRIMES		ASSIST	JOHNSON, BRIAN	ADMIN	2020	Oct	TH	19	1933	1954	1958	0	25

Call ID	Case ID	Date	Time	Address	Loc Com	Disposition	Officer Name	How Receive	Year	Month	DOW	Hour	Time Disp	Time Arrive	Time Clear	TS Hour	TS Minute
20042155		10/01/2020	1941	SE 37TH ST / S JAMES ST, GRIMES		DUPNCAN		ADMIN	2020	Oct	TH	19	0000	0000	1948	0	0
20042230		10/02/2020	1048	SW 5TH CT / SW BROOKSIDE DR, GRIMES		UTL	KOPATICH, AMY	ADMIN	2020	Oct	FR	10	1209	1236	1238	0	29
20042353		10/03/2020	0058	1104 NE 21ST ST, GRIMES		ADVISED	LOWRY, STEVEN	ANI/ALI	2020	Oct	SA	0	0110	0112	0233	1	23
20042654		10/05/2020	1141	1110 NE 21ST ST, GRIMES		CANCEL	CLINE, TROY	ADMIN	2020	Oct	MO	11	1145	1145	1155	0	10
20042676		10/05/2020	1420	412 NW 8TH ST, GRIMES		CASE	CLINE, TROY	ADMIN	2020	Oct	MO	14	1423	1612	1625	2	2
20043328		10/09/2020	1109	808 SE 16TH ST, GRIMES		CASE	KING, WILLIAM	ADMIN	2020	Oct	FR	11	1110	1141	1257	1	47
20043330		10/09/2020	1150	705 SE SHAWVER DR, GRIMES		ADVISED	KING, WILLIAM	ADMIN	2020	Oct	FR	11	1159	1202	1210	0	11
20043445		10/10/2020	0204	900 SE DOVETAIL RD, GRIMES		CHECKS O	REES, HALEIGH	ADMIN	2020	Oct	SA	2	0209	0213	0220	0	11
20043494		10/10/2020	1220	2401 NE CHEVALIA CT, GRIMES		ADVISED	ESTAYO, ERICA	ADMIN	2020	Oct	SA	12	1221	1221	1244	0	23
20043562		10/10/2020	2305	812 SW TIMBERVIEW DR, GRIMES		TOUR	KAY, DONALD	ADMIN	2020	Oct	SA	23	2306	2327	2334	0	28
20043620		10/11/2020	1122	3009 SE VICTORY DR, GRIMES		CASE	ESTAYO, ERICA	ADMIN	2020	Oct	SU	11	1131	1148	1209	0	38
20044393		10/16/2020	1208	617 NE 7TH ST, GRIMES		ADVISED	TOBEY, EMMA	OFFICER	2020	Oct	FR	12	1208	1208	1248	0	40

Call ID	Case ID	Date	Time	Address	Loc Com	Disposition	Officer Name	How Receive	Year	Month	DOW	Hour	Time Disp	Time Arrive	Time Clear	TS Hour	TS Minute
20044493		10/17/2020	0710	807 SE 10TH LN, GRIMES		ADVISED	DAUTOVIC, MEVLID	ANI/ALI	2020	Oct	SA	7	0710	0716	0750	0	40
20044685		10/18/2020	1107	2013 NW SUNSET LN, GRIMES		UTL	KOPATICH, AMY	ADMIN	2020	Oct	SU	11	1108	1134	1145	0	37
20044689		10/18/2020	1252	NW 8TH ST / NW AUTUMN PARK DR, GRIMES		ASSIST	BALLENGER, STEVEN	ADMIN	2020	Oct	SU	12	1252	1259	1308	0	16
20044778		10/19/2020	0925	155 SW MAPLEWOOD DR, GRIMES	: @GRIMES PARK APARTMENTS - GRIM	ASSIST	BALLENGER, STEVEN	ADMIN	2020	Oct	MO	9	0926	0950	1026	1	0
20044957		10/20/2020	1250	601 NW NORTON CIR, GRIMES		TOUR	TOBEY, EMMA	ADMIN	2020	Oct	TU	12	1253	1254	1254	0	1
20045337		10/23/2020	0812	2555 W 1ST ST, GRIMES	: @DCG HIGH SCHOOL - GRIM	ADVISED	DAUTOVIC, MEVLID	ADMIN	2020	Oct	FR	8	0827	0840	1001	1	34
20045526		10/24/2020	1543	312 NW 8TH ST, GRIMES		CANCELEV		ADMIN	2020	Oct	SA	15	0000	0000	1556	0	0
20045785		10/26/2020	1355	1112 NE PARK ST, GRIMES		ASSIST	KING, WILLIAM	ADMIN	2020	Oct	MO	13	1357	1420	1433	0	36
20045937		10/27/2020	1356	601 SE MEADOWLARK DR, GRIMES		CASE	KING, WILLIAM	ADMIN	2020	Oct	TU	13	1415	1431	1443	0	28
20045938		10/27/2020	1413	301 SE 11TH ST, GRIMES		ADVISED	KING, WILLIAM	ADMIN	2020	Oct	TU	14	1415	1415	1415	0	0
20046098		10/28/2020	1600	3001 SE COVENANT DR, GRIMES		CASE	CLINE, TROY	ADMIN	2020	Oct	WE	16	1600	1629	1712	1	12
20046366		10/30/2020	0912	809 NE 11TH ST, GRIMES		CASE	KING, WILLIAM	ADMIN	2020	Oct	FR	9	0915	0943	0953	0	38

Call ID	Case ID	Date	Time	Address	Loc Com	Disposition	Officer Name	How Receive	Year	Month	DOW	Hour	Time Disp	Time Arrive	Time Clear	TS Hour	TS Minute
ASSAULT		Total = 2															
20042560	20005982	10/04/2020	1926	811 SE CROSSINGS LN, GRIMES		ASSIST	MCATEE, JESSE	ADMIN	2020	Oct	SU	19	1926	1930	2055	1	29
20042561		10/04/2020	1931	811 SE CROSSINGS LN, GRIMES		CANCELEV		ADMIN	2020	Oct	SU	19	0000	0000	1932	0	0
ASSIST		Total = 70															
20042093		10/01/2020	1058	101 SE DESTINATION DR, GRIMES	: @GRIMES FAMILY PHYSICIANS - GRIM	ASSIST	DAUTOVIC, MEVLID	ANI/ALI	2020	Oct	TH	10	1058	1102	1106	0	8
20042109		10/01/2020	1442	1906 SE 24TH ST, GRIMES		ASSIST	ARCURI, CHRISTIE	ADMIN	2020	Oct	TH	14	1447	1449	1459	0	12
20042150		10/01/2020	1921	212 NE CIRCLE DR, GRIMES		ASSIST	KRILE, CHALENA	ANI/ALI	2020	Oct	TH	19	1922	1923	1926	0	4
20042223		10/02/2020	0942	101 SE DESTINATION DR, GRIMES	: @GRIMES FAMILY PHYSICIANS - GRIM	BROA		ANI/ALI	2020	Oct	FR	9	0943	0943	0944	0	1
20042258		10/02/2020	1449	1011 SW 5TH CT, GRIMES		ASSIST	BALLENGER, STEVEN	ANI/ALI	2020	Oct	FR	14	1453	1500	1527	0	34
20042508		10/04/2020	0845	622 SE EWING ST, GRIMES		ASSIST	HAKE, MICHAEL	ADMIN	2020	Oct	SU	8	0845	0848	0901	0	16
20042514		10/04/2020	1008	3014 SE GLENSTONE DR, GRIMES		ASSIST	KINNEY, PHILIP	ADMIN	2020	Oct	SU	10	1009	1012	1018	0	9
20042603		10/05/2020	0202	1000 SE 11TH ST, GRIMES	: @MEADOWLARK PLACE APARTMENTS - GRIM:1	ADVISED	LEWELLIN, LARRY	ADMIN	2020	Oct	MO	2	0202	0204	0223	0	21

Call ID	Case ID	Date	Time	Address	Loc Com	Disposition	Officer Name	How Receive	Year	Month	DOW	Hour	Time Disp	Time Arrive	Time Clear	TS Hour	TS Minute
20042630		10/05/2020	0842	703 SE DOVETAIL RD, GRIMES		ASSIST	KINNEY, PHILIP	ANI/ALI	2020	Oct	MO	8	0844	0854	0854	0	10
20042711		10/05/2020	1724	1017 SE MEADOWLARK DR, GRIMES		BROA		ADMIN	2020	Oct	MO	17	1725	1725	1737	0	12
20042719		10/05/2020	1830	605 SE GATEWAY DR, GRIMES		BROA		ADMIN	2020	Oct	MO	18	1832	1832	1841	0	9
20042869		10/06/2020	1605	109 NE CIRCLE DR, GRIMES		ADVISED		ADMIN	2020	Oct	TU	16	1654	1654	1709	0	15
20042900		10/06/2020	1932	1120 SE 11TH ST, GRIMES	: @MEADOWLARK PLACE APARTMENTS - GRIM	ASSIST	KRILE, CHALENA	ADMIN	2020	Oct	TU	19	1932	1940	1942	0	10
20042902		10/06/2020	2002	2555 W 1ST ST, GRIMES	: @DCG HIGH SCHOOL - GRIM	ASSIST	CORY, IAN	ADMIN	2020	Oct	TU	20	2003	2003	2055	0	52
20042904		10/06/2020	2021	2808 SE COVENANT DR, GRIMES				ANI/ALI	2020	Oct	TU	20	2022	2022	2247	2	25
20042934		10/07/2020	0200	604 NE 4TH ST, GRIMES	: @CLARKSON APARTMENTS - GRIM			ADMIN	2020	Oct	WE	2	0200	0200	0207	0	7
20042977		10/07/2020	0745	2308 SE 7TH LN, GRIMES		ASSIST	BALLENGER, STEVEN	ADMIN	2020	Oct	WE	7	0746	0751	0758	0	12
20042984		10/07/2020	0819	1713 NW MORNINGSIDE DR, GRIMES		ASSIST	KINNEY, PHILIP	ANI/ALI	2020	Oct	WE	8	0820	0823	0829	0	9
20043055		10/07/2020	1538	3705 SE BEISSER DR, GRIMES	: @BEISSER LUMBER - GRIM	ASSIST	KRILE, CHALENA	ADMIN	2020	Oct	WE	15	1538	1542	1547	0	9

Call ID	Case ID	Date	Time	Address	Loc Com	Disposition	Officer Name	How Receive	Year	Month	DOW	Hour	Time Disp	Time Arrive	Time Clear	TS Hour	TS Minute
20043192		10/08/2020	1026	2605 SE LIBERTY DR, GRIMES		ASSIST	DAUTOVIC, MEVLID	ANI/ALI	2020	Oct	TH	10	1031	1033	1037	0	6
20043201		10/08/2020	1150	1301 SE GATEWAY DR, GRIMES		ASSIST	ROMP, KEITH	ANI/ALI	2020	Oct	TH	11	1151	1154	1206	0	15
20043203		10/08/2020	1205	1300-B SE GATEWAY DR, GRIMES		ASSIST	BALLENGER, STEVEN	ADMIN	2020	Oct	TH	12	1206	1212	1418	2	12
20043271		10/08/2020	2305	3305 SE GLENSTONE DR, GRIMES		ASSIST	RANGEL, ALEXANDRIA	ANI/ALI	2020	Oct	TH	23	2306	2306	2315	0	9
20043296		10/09/2020	0354	3102 SE FREEDOM DR, GRIMES				ANI/ALI	2020	Oct	FR	3	0355	0355	0546	1	51
20043310		10/09/2020	0819	1500 SE 37TH ST, GRIMES	: NATIONAL CAR WASH SOLUTIONS	CANCEL	KINNEY, PHILIP	ADMIN	2020	Oct	FR	8	0820	0825	0841	0	21
20043374		10/09/2020	1651	1895 SE GRIMES BLVD, GRIMES		ASSIST	ARNOLD, BRYCE	ANI/ALI	2020	Oct	FR	16	1651	1653	1658	0	7
20043385		10/09/2020	1758	2500 SE 37TH ST, GRIMES	: @CUTTYS CAMPGROUND - GRIM	ASSIST	ARNOLD, BRYCE	ANI/ALI	2020	Oct	FR	17	1758	1807	1812	0	14
20043463		10/10/2020	0618	3305 SE GLENSTONE DR, GRIMES		ASSIST	HADSALL, MATTHEW	ANI/ALI	2020	Oct	SA	6	0618	0625	0637	0	19
20043472		10/10/2020	0855	1317 NW 5TH ST, GRIMES		ADVISED		ADMIN	2020	Oct	SA	8	1027	1027	1042	0	15
20043489		10/10/2020	1057	804 SE 16TH ST, GRIMES		ASSIST	KINNEY, PHILIP	ADMIN	2020	Oct	SA	10	1102	1110	1110	0	8

Call ID	Case ID	Date	Time	Address	Loc Com	Disposition	Officer Name	How Receive	Year	Month	DOW	Hour	Time Disp	Time Arrive	Time Clear	TS Hour	TS Minute
20043552		10/10/2020	2127	1912 SE 32ND ST, GRIMES		ASSIST	ARNOLD, BRYCE	ANI/ALI	2020	Oct	SA	21	2128	2137	2138	0	10
20043623		10/11/2020	1136	200 SW BROOKSIDE DR, GRIMES	: @KENNYBROOK VILLAGE - GRIM	ASSIST	KINNEY, PHILIP	ANI/ALI	2020	Oct	SU	11	1139	1152	1152	0	13
20043653		10/11/2020	1553	3305 SE GLENSTONE DR, GRIMES		ADVISED	ARNOLD, BRYCE	ADMIN	2020	Oct	SU	15	1554	1558	1607	0	13
20043662		10/11/2020	1723	204 SE MAIN ST, GRIMES	: @STEVIE CS - GRIM	ADVISED	ARNOLD, BRYCE	ANI/ALI	2020	Oct	SU	17	1724	1731	1736	0	12
20043680		10/11/2020	2020	3305 SE GLENSTONE DR, GRIMES				ANI/ALI	2020	Oct	SU	20	2021	2021	2116	0	55
20043741		10/12/2020	0800	200 SW BROOKSIDE DR, GRIMES	: @KENNYBROOK VILLAGE - GRIM	BROA	HAKE, MICHAEL	ADMIN	2020	Oct	MO	8	0802	0811	0815	0	13
20043751		10/12/2020	0906	300 NE DESTINATION DR, GRIMES	: @MENARDS - GRIM	ASSIST	KINNEY, PHILIP	ANI/ALI	2020	Oct	MO	9	0907	0913	0928	0	21
20043819		10/12/2020	1837	1906 SE 24TH ST, GRIMES		ASSIST	ARCURI, CHRISTIE	ADMIN	2020	Oct	MO	18	1839	1842	1845	0	6
20043895		10/13/2020	0823	351 SE GATEWAY DR, GRIMES	: @FAREWAY - GRIM	ASSIST	DAUTOVIC, MEVLID	ANI/ALI	2020	Oct	TU	8	0824	0826	0834	0	10
20044145		10/14/2020	1952	2305 NE BEAVERBROOKE BLVD, GRIMES		ASSIST	KRILE, CHALENA	ANI/ALI	2020	Oct	WE	19	1953	1956	2007	0	14

Call ID	Case ID	Date	Time	Address	Loc Com	Disposition	Officer Name	How Receive	Year	Month	DOW	Hour	Time Disp	Time Arrive	Time Clear	TS Hour	TS Minute
20044369	20006230	10/16/2020	0745	4400-B SE BEISSER DR, GRIMES		CASE	BALLENGER, STEVEN	ANI/ALI	2020	Oct	FR	7	0746	0752	0844	0	58
20044437		10/16/2020	1722	200 SW BROOKSIDE DR, GRIMES	: @KENNYBROOK VILLAGE - GRIM	BROA		ADMIN	2020	Oct	FR	17	1724	1724	1750	0	26
20044496		10/17/2020	0803	704 NE 7TH ST, GRIMES		TOUR	DAUTOVIC, MEVLID	ADMIN	2020	Oct	SA	8	0804	0804	0805	0	1
20044503		10/17/2020	0909	317 SE JACOB ST, GRIMES	: @BROOKSIDE APARTMENTS - GRIM	ASSIST	BALLENGER, STEVEN	ADMIN	2020	Oct	SA	9	0910	0925	0953	0	43
20044668		10/18/2020	0811	200 SW BROOKSIDE DR, GRIMES	: @KENNYBROOK VILLAGE - GRIM,139	ASSIST	BALLENGER, STEVEN	ANI/ALI	2020	Oct	SU	8	0812	0828	0828	0	16
20044736		10/18/2020	2307	208 SE 3RD ST, GRIMES		BROA		ANI/ALI	2020	Oct	SU	23	2308	2308	0015	1	7
20044794		10/19/2020	1038	3100 SE FREEDOM DR, GRIMES		ASSIST	BALLENGER, STEVEN	ANI/ALI	2020	Oct	MO	10	1038	1043	1051	0	13
20044823		10/19/2020	1305	3500 SE MIEHE DR, GRIMES	: @IOWA STEAK COMPANY - GRIM	ASSIST	KINNEY, PHILIP	ADMIN	2020	Oct	MO	13	1306	1318	1318	0	12
20044826		10/19/2020	1353	625 SE EWING ST, GRIMES		ASSIST	KINNEY, PHILIP	ADMIN	2020	Oct	MO	13	1354	1417	1417	0	23
20045117		10/21/2020	1418	512 NE MAIN ST, GRIMES		ASSIST	KINNEY, PHILIP	ANI/ALI	2020	Oct	WE	14	1418	1436	1436	0	18

Call ID	Case ID	Date	Time	Address	Loc Com	Disposition	Officer Name	How Receive	Year	Month	DOW	Hour	Time Disp	Time Arrive	Time Clear	TS Hour	TS Minute
20045136		10/21/2020	1706	304 NW 10TH CIR, GRIMES		ASSIST	RINIKER, MICHAEL	ANI/ALI	2020	Oct	WE	17	1707	1713	1722	0	15
20045211		10/22/2020	0906	1101 SE GATEWAY DR, GRIMES			DAUTOVIC, MEVLID	ANI/ALI	2020	Oct	TH	9	0906	0911	0912	0	6
20045258		10/22/2020	1626	625 SE EWING ST, GRIMES		ADVISED	RINIKER, MICHAEL	ADMIN	2020	Oct	TH	16	1627	1627	1633	0	6
20045431		10/23/2020	2313	875 SE GATEWAY DR, GRIMES		ASSIST	FERLITSCH, ANTHONY	ANI/ALI	2020	Oct	FR	23	2314	2316	2343	0	29
20045488		10/24/2020	1039	206 E 1ST ST, GRIMES	: @CASEYS - GRIM	ASSIST	BALLENGER, STEVEN	ADMIN	2020	Oct	SA	10	1157	1157	1240	0	43
20045562		10/24/2020	2034	721 E 1ST ST, GRIMES	: @THE PRIME AND CROWN - GRIM	ASSIST	ARNOLD, BRYCE	ANI/ALI	2020	Oct	SA	20	2036	2038	2041	0	5
20045611		10/25/2020	0826	111 SE LITTLE BEAVER CT, GRIMES		ASSIST	DOVE, JEREMY	ADMIN	2020	Oct	SU	8	0827	0831	0921	0	54
20045659		10/25/2020	1741	905 SE SHAWVER DR, GRIMES		CHECKS O	CORY, IAN	ADMIN	2020	Oct	SU	17	1742	1745	1756	0	14
20045879		10/27/2020	0652	805 SE 10TH LN, GRIMES		ASSIST	BALLENGER, STEVEN	ADMIN	2020	Oct	TU	6	0652	0707	0716	0	24
20045899		10/27/2020	0919	416 SE 2ND ST, GRIMES		ASSIST	BALLENGER, STEVEN	ANI/ALI	2020	Oct	TU	9	0920	0922	0935	0	15
20045911		10/27/2020	0954	1884 SE DESTINATION DR, GRIMES		BROA	KINNEY, PHILIP	ANI/ALI	2020	Oct	TU	9	0955	1025	1026	0	31
20046003		10/27/2020	2327	2618 NW WILLOWBROOKE DR, GRIMES		ADVISED		ANI/ALI	2020	Oct	TU	23	2359	2359	2359	0	0

Call ID	Case ID	Date	Time	Address	Loc Com	Disposition	Officer Name	How Receive	Year	Month	DOW	Hour	Time Disp	Time Arrive	Time Clear	TS Hour	TS Minute
20046297		10/29/2020	2151	2409 SE VICTORY DR, GRIMES		ASSIST	MAY, JOHN	ANI/ALI	2020	Oct	TH	21	2151	2154	2207	0	16
20046354		10/30/2020	0827	251 SE GATEWAY CIR, GRIMES	: @AMERICINN - GRIM,127	ASSIST	ARCURI, CHRISTIE	ADMIN	2020	Oct	FR	8	0828	0828	0849	0	21
20046402		10/30/2020	1424	3005 SE MIEHE DR, GRIMES		ASSIST	ARCURI, CHRISTIE	ADMIN	2020	Oct	FR	14	1424	1447	1515	0	51
20046423		10/30/2020	1651	703 SE DOVETAIL RD, GRIMES		BROA		ANI/ALI	2020	Oct	FR	16	1705	1705	1727	0	22
20046501		10/31/2020	0707	1125 NE CYPRESS CIR, GRIMES		ASSIST	BALLENGER, STEVEN	ANI/ALI	2020	Oct	SA	7	0711	0715	0720	0	9
20046532		10/31/2020	1456	308 SE MAIN ST, GRIMES		ADVISED	BACH, BRYAN	ADMIN	2020	Oct	SA	14	1457	1459	1503	0	6
20046555		10/31/2020	1727	1350 SE GATEWAY DR, GRIMES		ADVISED	ARNOLD, BRYCE	ADMIN	2020	Oct	SA	17	1729	1730	1744	0	15
20046581		10/31/2020	2106	2201 NE BEAVERBROOKE BLVD, GRIMES		ASSIST	BACH, BRYAN	ADMIN	2020	Oct	SA	21	2107	2112	2117	0	10
ATL		**Total = 3**															
20043088		10/07/2020	1836	1016 NE SILKWOOD ST, GRIMES				ADMIN	2020	Oct	WE	18	1837	1837	1838	0	1
20043089		10/07/2020	1838	1016 NE SILKWOOD ST, GRIMES		ASSIST	KRILE, CHALENA	ADMIN	2020	Oct	WE	18	1838	1845	1903	0	25
20046364		10/30/2020	0901	301 SE 11TH ST, GRIMES		ADVISED	WENCK, BRYAN	ADMIN	2020	Oct	FR	9	0909	0915	0925	0	16

Call ID	Case ID	Date	Time	Address	Loc Com	Disposition	Officer Name	How Receive	Year	Month	DOW	Hour	Time Disp	Time Arrive	Time Clear	TS Hour	TS Minute
AUDIBLE		Total = 25															
20042131		10/01/2020	1659	1305 SW 37TH ST, GRIMES		CHECKS O	KRILE, CHALENA	ADMIN	2020	Oct	TH	16	1700	1707	1714	0	14
20042144		10/01/2020	1852	3000 SE GATEWAY DR, GRIMES	: @RTL EQUIPMENT - GRIM	CHECKS O	JOHNSON, BRIAN	ADMIN	2020	Oct	TH	18	1853	1859	1903	0	10
20042387		10/03/2020	0905	250 SE DESTINATION DR, GRIMES	: @PIZZA HUT	ADVISED	BALLENGER, STEVEN	ADMIN	2020	Oct	SA	9	0905	0906	0907	0	2
20042614		10/05/2020	0714	3000 SE GATEWAY DR, GRIMES	: @RTL EQUIPMENT - GRIM	CHECKS O	DAUTOVIC, MEVLID	ADMIN	2020	Oct	MO	7	0719	0723	0725	0	6
20042715		10/05/2020	1803	925 SE GATEWAY DR, GRIMES		CANCEL		ADMIN	2020	Oct	MO	18	1805	1805	1805	0	0
20042780		10/06/2020	0557	2200 SE 44TH CT, GRIMES		CHECKS O	RANGEL, ALEXANDRIA	ADMIN	2020	Oct	TU	5	0558	0603	0610	0	12
20043300		10/09/2020	0553	1400 SE 11TH ST, GRIMES		EMPLOYEE	RANGEL, ALEXANDRIA	ADMIN	2020	Oct	FR	5	0553	0559	0601	0	8
20043340		10/09/2020	1302	805 SE SHAWVER DR, GRIMES		CHECKS O	BALLENGER, STEVEN	ADMIN	2020	Oct	FR	13	1302	1307	1322	0	20
20043373		10/09/2020	1647	1305 SW 37TH ST, GRIMES		CHECKS O	KRILE, CHALENA	ADMIN	2020	Oct	FR	16	1648	1654	1706	0	18
20043635		10/11/2020	1256	3450 SE GATEWAY DR, GRIMES		CHECKS O	BALLENGER, STEVEN	ADMIN	2020	Oct	SU	12	1257	1304	1315	0	18
20043672		10/11/2020	1856	1212 NW 7TH CT, GRIMES		ADVISED	ARNOLD, BRYCE	ADMIN	2020	Oct	SU	18	1857	1904	1906	0	9

Call ID	Case ID	Date	Time	Address	Loc Com	Disposition	Officer Name	How Receive	Year	Month	DOW	Hour	Time Disp	Time Arrive	Time Clear	TS Hour	TS Minute
20043703		10/12/2020	0103	925 SE GATEWAY DR, GRIMES		CHECKS O	WARD, GREGORY	ADMIN	2020	Oct	MO	1	0103	0106	0108	0	5
20043708		10/12/2020	0151	925 SE GATEWAY DR, GRIMES		CHECKS O	WARD, GREGORY	ADMIN	2020	Oct	MO	1	0151	0151	0154	0	3
20043714		10/12/2020	0236	3505 SE CROSSROADS DR, GRIMES	: @CONTINENTAL ALARMS - GRIM	CHECKS O	WARD, GREGORY	ADMIN	2020	Oct	MO	2	0236	0241	0308	0	32
20043729		10/12/2020	0706	3100 SE ENTERPRISE DR, GRIMES	: @GILLOTTI COMPANIES - GRIM	ADVISED	HAKE, MICHAEL	ADMIN	2020	Oct	MO	7	0707	0707	0709	0	2
20044015		10/13/2020	2145	3100 SE ENTERPRISE DR, GRIMES	: @GILLOTTI COMPANIES - GRIM	CHECKS O	MAY, JOHN	ADMIN	2020	Oct	TU	21	2145	2147	2150	0	5
20044166		10/14/2020	2306	1601 SE GATEWAY DR, GRIMES		CHECKS O	GOOD, ADAM	ADMIN	2020	Oct	WE	23	2307	2310	2317	0	10
20044699		10/18/2020	1554	400 SE 17TH CT, GRIMES		ADVISED	ARNOLD, BRYCE	ADMIN	2020	Oct	SU	15	1554	1603	1604	0	10
20045032		10/20/2020	2140	3100 SE ENTERPRISE DR, GRIMES	: @GILLOTTI COMPANIES - GRIM	DISREGAR	JOHNSON, BRIAN	ADMIN	2020	Oct	TU	21	2140	2142	2142	0	2
20045060		10/21/2020	0201	410 SE MAIN ST, GRIMES	: @GRIMES COMMUNITY COMPLEX - GRIM	CHECKS O	RANGEL, ALEXANDRIA	ADMIN	2020	Oct	WE	2	0202	0208	0225	0	23
20045396		10/23/2020	1653	1305 SW 37TH ST, GRIMES		CHECKS O	KRILE, CHALENA	ADMIN	2020	Oct	FR	16	1655	1729	1732	0	37

Call ID	Case ID	Date	Time	Address	Loc Com	Disposition	Officer Name	How Receive	Year	Month	DOW	Hour	Time Disp	Time Arrive	Time Clear	TS Hour	TS Minute
20045408		10/23/2020	1947	3101 SW BROOKSIDE DR, GRIMES		CANCEL	ARNOLD, BRYCE	ADMIN	2020	Oct	FR	19	1948	1948	1950	0	2
20045731		10/26/2020	0758	2250 E 1ST ST, GRIMES	:@PANCHEROS	EMPLOYEE	KINNEY, PHILIP	ADMIN	2020	Oct	MO	7	0758	0803	0806	0	8
20045939		10/27/2020	1446	3808 SE CAPITOL CIR, GRIMES		ADVISED	ARNOLD, BRYCE	ADMIN	2020	Oct	TU	14	1447	1447	1450	0	3
20046027		10/28/2020	0550	1305 SW 37TH ST, GRIMES		CANCEL	LEWELLIN, LARRY	ADMIN	2020	Oct	WE	5	0552	0552	0553	0	1
BUILDING		**Total = 121**															
20042049		10/01/2020	0112	1541 SE 3RD ST, GRIMES	: @HYVEE CLINIC PHARMACY - GRIM	CHECKS O	RANGEL, ALEXANDRIA	OFFICER	2020	Oct	TH	1	0112	0112	0118	0	6
20042055		10/01/2020	0237	1650 SE 37TH ST, GRIMES	: @TOYOTA OF DES MOINES - GRIM	CHECKS O	RANGEL, ALEXANDRIA	OFFICER	2020	Oct	TH	2	0237	0237	0248	0	11
20042058		10/01/2020	0406	3050 SE MIEHE DR, GRIMES		CHECKS O	WARD, GREGORY	OFFICER	2020	Oct	TH	4	0406	0406	0410	0	4
20042168		10/01/2020	2205	2555 W 1ST ST, GRIMES	: @DALLAS CENTER GRIMES HIGH SCHOOL - GRIM	CHECKS O	JOHNSON, BRIAN	OFFICER	2020	Oct	TH	22	2205	2205	2209	0	4
20042194		10/02/2020	0304	751 NE GATEWAY DR, GRIMES	: @EARL MAY - GRIM	CHECKS O	SCHUTTE, ROBERT	OFFICER	2020	Oct	FR	3	0304	0304	0306	0	2
20042476		10/04/2020	0021	1801 N JAMES ST, GRIMES		CHECKS O	ZEBEDEE, MATTHEW	OFFICER	2020	Oct	SU	0	0021	0021	0025	0	4

Call ID	Case ID	Date	Time	Address	Loc Com	Disposition	Officer Name	How Receive	Year	Month	DOW	Hour	Time Disp	Time Arrive	Time Clear	TS Hour	TS Minute
20042478		10/04/2020	0027	775 SW 37TH ST, GRIMES	: @AFFORD IT STORAGE - GRIM	CHECKS O	KAY, DONALD	OFFICER	2020	Oct	SU	0	0027	0027	0033	0	6
20042481		10/04/2020	0115	3605 SE MIEHE DR, GRIMES	: @CLIMB IOWA - GRIM	CHECKS O	ZEBEDEE, MATTHEW	OFFICER	2020	Oct	SU	1	0115	0115	0119	0	4
20042490		10/04/2020	0234	1830 SE PRINCETON DR, GRIMES		CHECKS O	ZEBEDEE, MATTHEW	OFFICER	2020	Oct	SU	2	0234	0234	0241	0	7
20042500		10/04/2020	0530	100 NE JACOB ST, GRIMES	: @CITY STATE BANK - GRIM	CHECKS O	ZEBEDEE, MATTHEW	OFFICER	2020	Oct	SU	5	0530	0530	0534	0	4
20042582		10/04/2020	2333	1650 SE 37TH ST, GRIMES	: @TOYOTA OF DES MOINES - GRIM	CHECKS O	RANGEL, ALEXANDRIA	OFFICER	2020	Oct	SU	23	2333	2333	2337	0	4
20042592		10/05/2020	0028	241 SE DESTINATION DR, GRIMES		CHECKS O	RANGEL, ALEXANDRIA	OFFICER	2020	Oct	MO	0	0028	0028	0033	0	5
20042739		10/05/2020	2125	2300 SE 37TH ST, GRIMES	: @MC ADVANTAGES - GRIM	CHECKS O	DOVE, JEREMY	OFFICER	2020	Oct	MO	21	2125	2125	2128	0	3
20042752		10/06/2020	0003	1405 SE 28TH ST, GRIMES		CHECKS O	HADSALL, MATTHEW	OFFICER	2020	Oct	TU	0	0003	0003	0006	0	3
20042754		10/06/2020	0012	1541 SE 3RD ST, GRIMES	: @HYVEE CLINIC PHARMACY - GRIM	CHECKS O	RANGEL, ALEXANDRIA	OFFICER	2020	Oct	TU	0	0012	0012	0017	0	5

Call ID	Case ID	Date	Time	Address	Loc Com	Disposition	Officer Name	How Receive	Year	Month	DOW	Hour	Time Disp	Time Arrive	Time Clear	TS Hour	TS Minute
20042755		10/06/2020	0018	2300 SE 37TH ST, GRIMES	: @MC ADVANTAGES - GRIM	CHECKS O	HADSALL, MATTHEW	OFFICER	2020	Oct	TU	0	0018	0018	0023	0	5
20042772		10/06/2020	0417	1305 SE 28TH ST, GRIMES		CHECKS O	RANGEL, ALEXANDRIA	OFFICER	2020	Oct	TU	4	0417	0417	0419	0	2
20042773		10/06/2020	0420	1431 SE 28TH ST, GRIMES		CHECKS O	RANGEL, ALEXANDRIA	OFFICER	2020	Oct	TU	4	0420	0420	0424	0	4
20042916		10/06/2020	2324	3005 SE DESTINATION DR, GRIMES		NODP	RANGEL, ALEXANDRIA	OFFICER	2020	Oct	TU	23	2324	2324	2327	0	3
20042931		10/07/2020	0128	2300 SE 37TH ST, GRIMES	: @MC ADVANTAGES - GRIM	CHECKS O	RANGEL, ALEXANDRIA	OFFICER	2020	Oct	WE	1	0128	0128	0132	0	4
20042932		10/07/2020	0133	2380 SE 37TH ST, GRIMES	: @GRIMES CONGREGATION OF JEHOVAHS WITNESSES - GRIM	CHECKS O	RANGEL, ALEXANDRIA	OFFICER	2020	Oct	WE	1	0133	0133	0137	0	4
20042935		10/07/2020	0204	2300 SE 37TH ST, GRIMES	: @MC ADVANTAGES - GRIM	CHECKS O	SCHUTTE, ROBERT	OFFICER	2020	Oct	WE	2	0204	0204	0207	0	3
20043102		10/07/2020	2034	2300 SE 37TH ST, GRIMES	: @MC ADVANTAGES - GRIM: @BRIGHTWELLS BOATHOUSE - GRIM	CHECKS O	KRILE, CHALENA	OFFICER	2020	Oct	WE	20	2034	2034	2037	0	3

Call ID	Case ID	Date	Time	Address	Loc Com	Disposition	Officer Name	How Receive	Year	Month	DOW	Hour	Time Disp	Time Arrive	Time Clear	TS Hour	TS Minute
20043118		10/07/2020	2330	2300 SE 37TH ST, GRIMES	: @MC ADVANTAGES - GRIM	CHECKS O	RANGEL, ALEXANDRIA	OFFICER	2020	Oct	WE	23	2330	2330	2337	0	7
20043119		10/07/2020	2334	3101 SW BROOKSIDE DR, GRIMES		CHECKS O	WARD, GREGORY	OFFICER	2020	Oct	WE	23	2334	2334	2336	0	2
20043123		10/07/2020	2347	4151 SE CAPITOL CIR, GRIMES	: @SPRAYER SPECIALTIES - GRIM	CHECKS O	RANGEL, ALEXANDRIA	OFFICER	2020	Oct	WE	23	2347	2347	2350	0	3
20043125		10/08/2020	0013	3155 SE MIEHE DR, GRIMES	: @HEARTLAND HEATING & COOLING (SUITE 1) - GRIM	CHECKS O	RANGEL, ALEXANDRIA	OFFICER	2020	Oct	TH	0	0013	0013	0016	0	3
20043133		10/08/2020	0100	877 SE 19TH ST, GRIMES	: @MARANATHA BAPTIST CHURCH - GRIM	CHECKS O	WARD, GREGORY	OFFICER	2020	Oct	TH	1	0100	0100	0107	0	7
20043137		10/08/2020	0146	2100 SE GATEWAY DR, GRIMES		INFO	RANGEL, ALEXANDRIA	OFFICER	2020	Oct	TH	1	0146	0146	0618	4	32
20043145		10/08/2020	0316	250 SE GATEWAY DR, GRIMES	: @MEDICAP PHARMACY - GRIM	CHECKS O	WARD, GREGORY	OFFICER	2020	Oct	TH	3	0316	0316	0319	0	3
20043150		10/08/2020	0432	300 NE DESTNATION DR, GRIMES		CANCEL	WARD, GREGORY	OFFICER	2020	Oct	TH	4	0432	0432	0432	0	0
20043154		10/08/2020	0524	1851 SE DESTINATION DR, GRIMES	: @SOUTHERN CARLSON - GRIM	CHECKS O	RANGEL, ALEXANDRIA	OFFICER	2020	Oct	TH	5	0524	0524	0528	0	4

Call ID	Case ID	Date	Time	Address	Loc Com	Disposition	Officer Name	How Receive	Year	Month	DOW	Hour	Time Disp	Time Arrive	Time Clear	TS Hour	TS Minute
20043272		10/08/2020	2321	2300 SE 37TH ST, GRIMES	: @MC ADVANTAGES - GRIM	CHECKS O	RANGEL, ALEXANDRIA	OFFICER	2020	Oct	TH	23	2321	2321	2324	0	3
20043275		10/08/2020	2358	2555 W 1ST ST, GRIMES	: @DALLAS CENTER GRIMES HIGH SCHOOL - GRIM	CHECKS O	SNOOK, MICHAEL	OFFICER	2020	Oct	TH	23	2358	2358	0002	0	4
20043283		10/09/2020	0119	241 SE DESTINATION DR, GRIMES		CHECKS O	RANGEL, ALEXANDRIA	OFFICER	2020	Oct	FR	1	0119	0119	0133	0	14
20043291		10/09/2020	0242	3605 SE MIEHE DR, GRIMES	: @CLIMB IOWA - GRIM	CHECKS O	SNOOK, MICHAEL	OFFICER	2020	Oct	FR	2	0242	0242	0246	0	4
20043297		10/09/2020	0355	500 NE BEAVERBROOKE BLVD, GRIMES	: @HERITAGE ELEMENTARY SCHOOL - GRIM	CHECKS O	SNOOK, MICHAEL	OFFICER	2020	Oct	FR	3	0355	0355	0400	0	5
20043401		10/09/2020	2004	3450 SE GATEWAY DR, GRIMES		CHECKS O	KRILE, CHALENA	OFFICER	2020	Oct	FR	20	2004	2004	2012	0	8
20043459		10/10/2020	0431	1800 SE GATEWAY DR, GRIMES	: @ADESA AUTO AUCTION - GRIM	CHECKS O	REES, HALEIGH	OFFICER	2020	Oct	SA	4	0431	0431	0435	0	4
20043461		10/10/2020	0550	3160 SE GRIMES BLVD, GRIMES	: @HICKLIN POWER SPORTS (SUITE 700 A&B) - GRIM	CHECKS O	HADSALL, MATTHEW	OFFICER	2020	Oct	SA	5	0550	0550	0554	0	4
20043557		10/10/2020	2158	2306 SE 37TH ST, GRIMES		CHECKS O	ARNOLD, BRYCE	OFFICER	2020	Oct	SA	21	2158	2158	2201	0	3

Call ID	Case ID	Date	Time	Address	Loc Com	Disposition	Officer Name	How Receive	Year	Month	DOW	Hour	Time Disp	Time Arrive	Time Clear	TS Hour	TS Minute
20043685		10/11/2020	2120	1603 SE 37TH ST, GRIMES		CHECKS O	ARNOLD, BRYCE	OFFICER	2020	Oct	SU	21	2120	2120	2124	0	4
20043694		10/11/2020	2353	500 NE BEAVERBROOKE BLVD, GRIMES	: @HERITAGE ELEMENTARY SCHOOL - GRIM	CHECKS O	WARD, GREGORY	OFFICER	2020	Oct	SU	23	2353	2353	2355	0	2
20043717		10/12/2020	0344	3711 SE CAPITOL CIR, GRIMES	: @CONTINENTAL CONSTRUCTION CO - GRIM	CHECKS O	WARD, GREGORY	OFFICER	2020	Oct	MO	3	0344	0344	0346	0	2
20043859		10/13/2020	0113	2055 E 1ST ST, GRIMES	: @ALDI - GRIM	CHECKS O	RANGEL, ALEXANDRIA	OFFICER	2020	Oct	TU	1	0113	0113	0119	0	6
20043867		10/13/2020	0244	241 SE DESTINATION DR, GRIMES		CHECKS O	RANGEL, ALEXANDRIA	OFFICER	2020	Oct	TU	2	0244	0244	0248	0	4
20043872		10/13/2020	0403	4201 S JAMES ST, GRIMES		CHECKS O	RANGEL, ALEXANDRIA	OFFICER	2020	Oct	TU	4	0403	0403	0406	0	3
20044027		10/14/2020	0005	2000 SE 37TH ST, GRIMES	: @AUTO RESCUE DETAILING - GRIM	CHECKS O	HADSALL, MATTHEW	OFFICER	2020	Oct	WE	0	0005	0005	0009	0	4
20044030		10/14/2020	0029	250 SE GATEWAY DR, GRIMES	: @MEDICAP PHARMACY - GRIM	CHECKS O	RANGEL, ALEXANDRIA	OFFICER	2020	Oct	WE	0	0029	0029	0035	0	6
20044041		10/14/2020	0259	2300 SE 37TH ST, GRIMES	: @MC ADVANTAGES - GRIM	CHECKS O	RANGEL, ALEXANDRIA	OFFICER	2020	Oct	WE	2	0259	0259	0302	0	3

Call ID	Case ID	Date	Time	Address	Loc Com	Disposition	Officer Name	How Receive	Year	Month	DOW	Hour	Time Disp	Time Arrive	Time Clear	TS Hour	TS Minute
20044171		10/14/2020	2352	2300 SE 37TH ST, GRIMES	: @MC ADVANTAGES - GRIM	CHECKS O	GOOD, ADAM	OFFICER	2020	Oct	WE	23	2352	2352	2354	0	2
20044182		10/15/2020	0218	2300 SE 37TH ST, GRIMES	: @MC ADVANTAGES - GRIM	CHECKS O	RANGEL, ALEXANDRIA	OFFICER	2020	Oct	TH	2	0218	0218	0220	0	2
20044194		10/15/2020	0435	2000 SE 37TH ST, GRIMES	: @AUTO RESCUE DETAILING - GRIM	CHECKS O	GOOD, ADAM	OFFICER	2020	Oct	TH	4	0435	0435	0439	0	4
20044338		10/16/2020	0010	200 SE 37TH ST, GRIMES		CHECKS O	GOOD, ADAM	OFFICER	2020	Oct	FR	0	0010	0010	0012	0	2
20044341		10/16/2020	0034	241 SE DESTINATION DR, GRIMES		CHECKS O	RANGEL, ALEXANDRIA	OFFICER	2020	Oct	FR	0	0034	0034	0041	0	7
20044356		10/16/2020	0305	300 NE DESTINATION DR, GRIMES	: @MENARDS - GRIM	CHECKS O	GOOD, ADAM	OFFICER	2020	Oct	FR	3	0305	0305	0314	0	9
20044360		10/16/2020	0416	1650 SE 37TH ST, GRIMES	: @TOYOTA OF DES MOINES - GRIM	CHECKS O	RANGEL, ALEXANDRIA	OFFICER	2020	Oct	FR	4	0416	0416	0430	0	14
20044550		10/17/2020	1614	3310 SW BROOKSIDE DR, GRIMES		CHECKS O	KRILE, CHALENA	OFFICER	2020	Oct	SA	16	1614	1614	1618	0	4
20044569		10/17/2020	1743	1300 SW COUNTY LINE RD, GRIMES	:	CHECKS O	KRILE, CHALENA	OFFICER	2020	Oct	SA	17	1743	1743	1748	0	5
20044579		10/17/2020	1822	1305 SE 28TH ST, GRIMES		CHECKS O	KRILE, CHALENA	OFFICER	2020	Oct	SA	18	1822	1822	1825	0	3

Call ID	Case ID	Date	Time	Address	Loc Com	Disposition	Officer Name	How Receive	Year	Month	DOW	Hour	Time Disp	Time Arrive	Time Clear	TS Hour	TS Minute
20044626		10/18/2020	0026	2000 SE 37TH ST, GRIMES	: @AUTO RESCUE DETAILING - GRIM	CHECKS O	HADSALL, MATTHEW	OFFICER	2020	Oct	SU	0	0026	0026	0032	0	6
20044745		10/19/2020	0031	2351 E 1ST ST, GRIMES	: @KWIK STAR - GRIM	CHECKS O	GOOD, ADAM	OFFICER	2020	Oct	MO	0	0031	0031	0031	0	0
20044746		10/19/2020	0042	1450 NE GATEWAY CT, GRIMES		CHECKS O	HADSALL, MATTHEW	OFFICER	2020	Oct	MO	0	0042	0042	0045	0	3
20044884		10/19/2020	2313	3160 SE GRIMES BLVD, GRIMES	: @HICKLIN POWER SPORTS (SUITE 700 A&B) - GRIM	CHECKS O	HADSALL, MATTHEW	OFFICER	2020	Oct	MO	23	2313	2313	2317	0	4
20044898		10/20/2020	0116	2151 SE 11TH ST, GRIMES	: @BOMGAARS - GRIM	CHECKS O	LEWELLIN, LARRY	OFFICER	2020	Oct	TU	1	0116	0116	0118	0	2
20044909		10/20/2020	0306	2570 E 1ST ST, GRIMES		CHECKS O	LEWELLIN, LARRY	OFFICER	2020	Oct	TU	3	0306	0306	0310	0	4
20045005		10/20/2020	1800	1800 SE GATEWAY DR, GRIMES	: @ADESA AUTO AUCTION - GRIM	CHECKS O	JOHNSON, BRIAN	OFFICER	2020	Oct	TU	18	1800	1800	1805	0	5
20045030		10/20/2020	2120	2555 W 1ST ST, GRIMES	: @DALLAS CENTER GRIMES HIGH SCHOOL - GRIM	CHECKS O	JOHNSON, BRIAN	OFFICER	2020	Oct	TU	21	2120	2120	2126	0	6
20045063		10/21/2020	0311	1541 SE 3RD ST, GRIMES	: @HYVEE CLINIC PHARMACY - GRIM	CHECKS O	RANGEL, ALEXANDRIA	OFFICER	2020	Oct	WE	3	0311	0311	0318	0	7

Call ID	Case ID	Date	Time	Address	Loc Com	Disposition	Officer Name	How Receive	Year	Month	DOW	Hour	Time Disp	Time Arrive	Time Clear	TS Hour	TS Minute
20045295		10/22/2020	2327	3500 SE MIEHE DR, GRIMES	: @IOWA STEAK COMPANY - GRIM	CHECKS O	GOOD, ADAM	OFFICER	2020	Oct	TH	23	2327	2327	2328	0	1
20045301		10/23/2020	0049	200 SE 37TH ST, GRIMES		CHECKS O	GOOD, ADAM	OFFICER	2020	Oct	FR	0	0049	0049	0050	0	1
20045310		10/23/2020	0248	1800 SE GATEWAY DR, GRIMES	: @ADESA AUTO AUCTION - GRIM	CHECKS O	GOOD, ADAM	OFFICER	2020	Oct	FR	2	0248	0248	0256	0	8
20045319		10/23/2020	0425	1650 SE 37TH ST, GRIMES	: @TOYOTA OF DES MOINES - GRIM	ADVISED	RANGEL, ALEXANDRIA	OFFICER	2020	Oct	FR	4	0427	0427	0428	0	1
20045411		10/23/2020	1954	605 SW 37TH ST, GRIMES	: @EAGLE SIGN CO - GRIM	CHECKS O	KRILE, CHALENA	OFFICER	2020	Oct	FR	19	1954	1954	1958	0	4
20045412		10/23/2020	2004	3310 SW BROOKSIDE DR, GRIMES		CHECKS O	KRILE, CHALENA	OFFICER	2020	Oct	FR	20	2004	2004	2009	0	5
20045413		10/23/2020	2024	2655 SE ENTERPRISE DR, GRIMES	: @VHF - GRIM	CHECKS O	KRILE, CHALENA	OFFICER	2020	Oct	FR	20	2024	2024	2025	0	1
20045442		10/24/2020	0039	1106 SW BROOKSIDE DR, GRIMES		CHECKS O	GOOD, ADAM	OFFICER	2020	Oct	SA	0	0039	0039	0044	0	5
20045453		10/24/2020	0135	1650 SE 37TH ST, GRIMES	: @TOYOTA OF DES MOINES - GRIM	CHECKS O	RANGEL, ALEXANDRIA	OFFICER	2020	Oct	SA	1	0135	0135	0143	0	8
20045476		10/24/2020	0808	402 SE 6TH ST, GRIMES		CHECKS O	DAUTOVIC, MEVLID	OFFICER	2020	Oct	SA	8	0808	0808	0810	0	2
20045580		10/25/2020	0005	4201 S JAMES ST, GRIMES		CHECKS O	GOOD, ADAM	OFFICER	2020	Oct	SU	0	0005	0005	0013	0	8

Call ID	Case ID	Date	Time	Address	Loc Com	Disposition	Officer Name	How Receive	Year	Month	DOW	Hour	Time Disp	Time Arrive	Time Clear	TS Hour	TS Minute
20045672		10/25/2020	2019	3201 SE DESTINATION DR, GRIMES		CHECKS O	CORY, IAN	OFFICER	2020	Oct	SU	20	2019	2019	2023	0	4
20045675		10/25/2020	2030	3400 SE MIEHE DR, GRIMES	: @DENTAL DISTRIBUTORS (SUITE 6) - GRIM	CHECKS O	CORY, IAN	OFFICER	2020	Oct	SU	20	2030	2030	2032	0	2
20045684		10/25/2020	2241	1750 NE GATEWAY CT, GRIMES		CHECKS O	GOOD, ADAM	OFFICER	2020	Oct	SU	22	2241	2241	2243	0	2
20045693		10/26/2020	0022	2300 SE 37TH ST, GRIMES	: @MC ADVANTAGES - GRIM	CHECKS O	GOOD, ADAM	OFFICER	2020	Oct	MO	0	0022	0022	0023	0	1
20045694		10/26/2020	0107	800 S JAMES ST, GRIMES	: @GRIMES SPORTS COMPLEX - GRIM	CHECKS O	GOOD, ADAM	OFFICER	2020	Oct	MO	1	0107	0107	0109	0	2
20045701		10/26/2020	0220	1800 SE GATEWAY DR, GRIMES	: @ADESA AUTO AUCTION - GRIM	CHECKS O	REES, HALEIGH	OFFICER	2020	Oct	MO	2	0220	0220	0224	0	4
20045706		10/26/2020	0442	2555 W 1ST ST, GRIMES	: @DALLAS CENTER GRIMES HIGH SCHOOL - GRIM	CHECKS O	REES, HALEIGH	OFFICER	2020	Oct	MO	4	0442	0442	0446	0	4
20045826		10/26/2020	1801	1750 NE GRIMES BLVD, GRIMES		ADVISED	GOOD, ADAM	OFFICER	2020	Oct	MO	18	1801	1801	1803	0	2
20045858		10/27/2020	0046	1493 SE GRIMES BLVD, GRIMES		CHECKS O	GOOD, ADAM	OFFICER	2020	Oct	TU	0	0046	0046	0146	1	0

Call ID	Case ID	Date	Time	Address	Loc Com	Disposition	Officer Name	How Receive	Year	Month	DOW	Hour	Time Disp	Time Arrive	Time Clear	TS Hour	TS Minute
20045865		10/27/2020	0201	500 NE BEAVERBROOKE BLVD, GRIMES	: @HERITAGE ELEMENTARY SCHOOL - GRIM: @HERITAGE ELEMENTARY - GRIM	CHECKS O		OFFICER	2020	Oct	TU	2	0201	0201	0207	0	6
20045868		10/27/2020	0231	300 NE DESTINATION DR, GRIMES	: @MENARDS - GRIM	CHECKS O	GOOD, ADAM	OFFICER	2020	Oct	TU	2	0231	0231	0233	0	2
20046009		10/28/2020	0052	2555 W 1ST ST, GRIMES	: @DALLAS CENTER GRIMES HIGH SCHOOL - GRIM	CHECKS O	REES, HALEIGH	OFFICER	2020	Oct	WE	0	0052	0052	0058	0	6
20046021		10/28/2020	0347	1800 SE GATEWAY DR, GRIMES	: @ADESA AUTO AUCTION - GRIM	CHECKS O	REES, HALEIGH	OFFICER	2020	Oct	WE	3	0347	0347	0352	0	5
20046120		10/28/2020	1843	3801 S JAMES ST, GRIMES		CHECKS O	NYSTROM, KIRSTEN	OFFICER	2020	Oct	WE	18	1843	1843	1845	0	2
20046127		10/28/2020	2023	904 NE MAIN ST, GRIMES		CHECKS O	NYSTROM, KIRSTEN	OFFICER	2020	Oct	WE	20	2023	2023	2026	0	3
20046149		10/28/2020	2343	801 W 1ST ST, GRIMES		CHECKS O	SNOOK, MICHAEL	OFFICER	2020	Oct	WE	23	2343	2343	2346	0	3
20046161		10/29/2020	0145	1001 S JAMES ST, GRIMES	: @ST PETERS LUTHERAN CHURCH - GRIM	CHECKS O	SNOOK, MICHAEL	OFFICER	2020	Oct	TH	1	0145	0145	0148	0	3
20046168		10/29/2020	0234	500 S JAMES ST, GRIMES	: @SOUTH PRAIRIE ELEMENTARY SCHOOL - GRIM	CHECKS O		OFFICER	2020	Oct	TH	2	0234	0234	0237	0	3

Call ID	Case ID	Date	Time	Address	Loc Com	Disposition	Officer Name	How Receive	Year	Month	DOW	Hour	Time Disp	Time Arrive	Time Clear	TS Hour	TS Minute
20046299		10/29/2020	2248	3050 SE MIEHE DR, GRIMES		CHECKS O	GOOD, ADAM	OFFICER	2020	Oct	TH	22	2248	2248	2249	0	1
20046300		10/29/2020	2253	2555 W 1ST ST, GRIMES	: @DALLAS CENTER GRIMES HIGH SCHOOL - GRIM	CHECKS O	NYSTROM, KIRSTEN	OFFICER	2020	Oct	TH	22	2253	2253	2257	0	4
20046303		10/29/2020	2311	1800 SE GATEWAY DR, GRIMES	: @ADESA AUTO AUCTION - GRIM	CHECKS O	GOOD, ADAM	OFFICER	2020	Oct	TH	23	2311	2311	2313	0	2
20046305		10/29/2020	2327	930 NE MAIN ST, GRIMES		CHECKS O	NYSTROM, KIRSTEN	OFFICER	2020	Oct	TH	23	2327	2327	2334	0	7
20046311		10/30/2020	0008	3801 S JAMES ST, GRIMES		CHECKS O	NYSTROM, KIRSTEN	OFFICER	2020	Oct	FR	0	0008	0008	0012	0	4
20046317		10/30/2020	0100	3520 SW BROOKSIDE DR, GRIMES		CHECKS O	NYSTROM, KIRSTEN	OFFICER	2020	Oct	FR	1	0100	0100	0102	0	2
20046335		10/30/2020	0325	300 NE DESTINATION DR, GRIMES	: @MENARDS - GRIM	CHECKS O	GOOD, ADAM	OFFICER	2020	Oct	FR	3	0325	0325	0325	0	0
20046336		10/30/2020	0332	1800 SE GATEWAY DR, GRIMES	: @ADESA AUTO AUCTION - GRIM	CHECKS O	NYSTROM, KIRSTEN	OFFICER	2020	Oct	FR	3	0332	0332	0333	0	1
20046339		10/30/2020	0423	751 NE GATEWAY DR, GRIMES	: @EARL MAY - GRIM	CHECKS O	NYSTROM, KIRSTEN	OFFICER	2020	Oct	FR	4	0423	0423	0431	0	8
20046446		10/30/2020	1954	3050 SE MIEHE DR, GRIMES		CHECKS O	DAUTOVIC, MEVLID	OFFICER	2020	Oct	FR	19	1954	1954	1957	0	3

Call ID	Case ID	Date	Time	Address	Loc Com	Disposition	Officer Name	How Receive	Year	Month	DOW	Hour	Time Disp	Time Arrive	Time Clear	TS Hour	TS Minute
20046453		10/30/2020	2129	3711 SE CAPITOL CIR, GRIMES	: @CONTINENTAL CONSTRUCTION CO - GRIM	CHECKS O	DAUTOVIC, MEVLID	OFFICER	2020	Oct	FR	21	2129	2129	2135	0	6
20046456		10/30/2020	2136	3755 SE CAPITOL CIR, GRIMES	: @LAWTONS TRUCK REPAIR - GRIM	CHECKS O	DAUTOVIC, MEVLID	OFFICER	2020	Oct	FR	21	2136	2136	2144	0	8
20046457		10/30/2020	2149	2901 SE DESTINATION DR, GRIMES		CHECKS O	CORY, IAN	OFFICER	2020	Oct	FR	21	2149	2149	2150	0	1
20046458		10/30/2020	2152	2300 SE 37TH ST, GRIMES	: @MC ADVANTAGES - GRIM	CHECKS O	CORY, IAN	OFFICER	2020	Oct	FR	21	2152	2152	2154	0	2
20046459		10/30/2020	2153	1650 SE 37TH ST, GRIMES	: @TOYOTA OF DES MOINES - GRIM	CHECKS O	DAUTOVIC, MEVLID	OFFICER	2020	Oct	FR	21	2153	2153	2158	0	5
20046460		10/30/2020	2155	3500 SE MIEHE DR, GRIMES	: @IOWA STEAK COMPANY - GRIM	CHECKS O	CORY, IAN	OFFICER	2020	Oct	FR	21	2155	2155	2158	0	3
20046461		10/30/2020	2159	3155 SE MIEHE DR, GRIMES	: @HEARTLAND HEATING & COOLING (SUITE 1) - GRIM	CHECKS O	CORY, IAN	OFFICER	2020	Oct	FR	21	2159	2159	2201	0	2
20046462		10/30/2020	2202	3105 SE ENTERPRISE DR, GRIMES		CHECKS O	DAUTOVIC, MEVLID	OFFICER	2020	Oct	FR	22	2202	2202	2204	0	2
20046466		10/30/2020	2258	1750 NE GATEWAY DR, GRIMES		CHECKS O	GOOD, ADAM	OFFICER	2020	Oct	FR	22	2258	2258	2259	0	1
20046481		10/31/2020	0127	1750 SE 11TH ST, GRIMES		CANCEL	WARD, GREGORY	OFFICER	2020	Oct	SA	1	0127	0127	0127	0	0

Call ID	Case ID	Date	Time	Address	Loc Com	Disposition	Officer Name	How Receive	Year	Month	DOW	Hour	Time Disp	Time Arrive	Time Clear	TS Hour	TS Minute
20046482		10/31/2020	0128	1751 SE 11TH ST, GRIMES		CHECKS O	WARD, GREGORY	OFFICER	2020	Oct	SA	1	0128	0128	0129	0	1
20046493		10/31/2020	0324	2100 SE GATEWAY DR, GRIMES		CHECKS O	WARD, GREGORY	OFFICER	2020	Oct	SA	3	0324	0324	0328	0	4
20046496		10/31/2020	0456	1500-B SW COUNTYLINE RD, GRIMES		CHECKS O	WARD, GREGORY	OFFICER	2020	Oct	SA	4	0456	0456	0459	0	3
BURG		**Total = 4**															
20042528	20005976	10/04/2020	1236	3600 SE GATEWAY DR, GRIMES	: @LOCKBOX STORAGE - GRIM	CASE	KINNEY, PHILIP	ADMIN	2020	Oct	SU	12	1237	1248	1336	0	59
20042695	20006006	10/05/2020	1607	1405 SE 28TH ST, GRIMES		CASE	DOVE, JEREMY	ADMIN	2020	Oct	MO	16	1634	1642	1726	0	52
20042797	20006019	10/06/2020	0850	2300 SE 37TH ST, GRIMES	: @MC ADVANTAGES - GRIM	CASE	KINNEY, PHILIP	ADMIN	2020	Oct	TU	8	0902	0934	0934	0	32
20046359	20006555	10/30/2020	0838	3711 SE CAPITOL CIR, GRIMES	:	CASE	DAUTOVIC, MEVLID	ADMIN	2020	Oct	FR	8	0841	0854	0921	0	40
CHINA		**Total = 6**															
20042331		10/02/2020	2138	702 SE WOODBINE DR, GRIMES		ASSIST	DOVE, JEREMY	ADMIN	2020	Oct	FR	21	2138	2144	2150	0	12
20042443		10/03/2020	1717	700-B SE CROSSINGS LN, GRIMES		UTL	JOHNSON, BRIAN	ADMIN	2020	Oct	SA	17	1718	1728	1730	0	12
20042712		10/05/2020	1734	755 SE GATEWAY DR, GRIMES		ADVISED	KRILE, CHALENA	ADMIN	2020	Oct	MO	17	1747	1757	1815	0	28

Call ID	Case ID	Date	Time	Address	Loc Com	Disposition	Officer Name	How Receive	Year	Month	DOW	Hour	Time Disp	Time Arrive	Time Clear	TS Hour	TS Minute
20043258		10/08/2020	1949	2100-B NE PARK DR, GRIMES		ASSIST	KRILE, CHALENA	OFFICER	2020	Oct	TH	19	1949	1949	2004	0	15
20045943		10/27/2020	1505	200 N JAMES ST, GRIMES	: @LIBRARY - GRIM	ADVISED	ARNOLD, BRYCE	ADMIN	2020	Oct	TU	15	1506	1508	1526	0	20
20046590	20006589	10/31/2020	2230	509 NE 8TH ST, GRIMES		CASE	LEWELLIN, LARRY	ADMIN	2020	Oct	SA	22	2231	2234	0102	3	31
COMMFIRE		**Total = 4**															
20042787		10/06/2020	0731	1800 SE GATEWAY DR, GRIMES	: @ADESA AUTO AUCTION - GRIM	ASSIST	KINNEY, PHILIP	ADMIN	2020	Oct	TU	7	0732	0735	0749	0	17
20043739		10/12/2020	0757	1500 SE 37TH ST, GRIMES	: @RYKO MANUFACTURING - GRIM	ASSIST	KINNEY, PHILIP	ANI/ALI	2020	Oct	MO	7	0801	0807	0837	0	36
20043815		10/12/2020	1803	1300 SE LITTLE BEAVER DR, GRIMES				ADMIN	2020	Oct	MO	18	1832	1832	1847	0	15
20045568		10/24/2020	2215	1250 SE 11TH ST, GRIMES	: @MEADOWLARK PLACE APARTMENTS - GRIM	BROA		ADMIN	2020	Oct	SA	22	2216	2216	2253	0	37
DEBRIS		**Total = 6**															
20043424		10/09/2020	2307	1300-B SE 11TH ST, GRIMES		INFO	HADSALL, MATTHEW	OFFICER	2020	Oct	FR	23	2307	2307	2316	0	9
20043515		10/10/2020	1600	1800-B SE GRIMES BLVD, GRIMES		CHECKS O	ARNOLD, BRYCE	OFFICER	2020	Oct	SA	16	1600	1600	1602	0	2
20044229		10/15/2020	0943	NE BEAVERBROOKE BLVD / NE GRIMES BLVD, GRIMES		BROA	DAUTOVIC, MEVLID	ANI/ALI	2020	Oct	TH	9	0946	0946	0951	0	5

Call ID	Case ID	Date	Time	Address	Loc Com	Disposition	Officer Name	How Receive	Year	Month	DOW	Hour	Time Disp	Time Arrive	Time Clear	TS Hour	TS Minute
20044970		10/20/2020	1439	SE 19TH ST / SE GRIMES BLVD, GRIMES		UTL	JOHNSON, BRIAN	ADMIN	2020	Oct	TU	14	1441	1447	1450	0	9
20045259		10/22/2020	1628	4400-B SE GRIMES BLVD, GRIMES		CHECKS O	RINIKER, MICHAEL	ANI/ALI	2020	Oct	TH	16	1629	1639	1641	0	12
20046100		10/28/2020	1624	1000-B SE GRIMES BLVD, GRIMES		ASSIST	NYSTROM, KIRSTEN	OFFICER	2020	Oct	WE	16	1624	1624	1626	0	2
DISPUTE		**Total = 14**															
20042710	20006010	10/05/2020	1716	1000 SE 11TH ST, GRIMES	: @MEADOWLARK PLACE APARTMENTS - GRIM	CASE	DOVE, JEREMY	ADMIN	2020	Oct	MO	17	1727	1730	1835	1	8
20043084		10/07/2020	1812	612 SE EWING ST, GRIMES		ADVISED	ARNOLD, BRYCE	ADMIN	2020	Oct	WE	18	1812	1815	1837	0	25
20043188		10/08/2020	0947	NE BEAVERBROOKE BLVD / NE GRIMES BLVD, GRIMES		UTL	BALLENGER, STEVEN	ANI/ALI	2020	Oct	TH	9	0949	0953	1000	0	11
20043246		10/08/2020	1800	905 NW SIENNA DR, GRIMES		ASSIST	ARNOLD, BRYCE	ADMIN	2020	Oct	TH	18	1802	1814	1916	1	14
20043278		10/09/2020	0015	204 SE MAIN ST, GRIMES	: @STEVIE CS - GRIM	ASSIST	SNOOK, MICHAEL	ANI/ALI	2020	Oct	FR	0	0016	0018	0029	0	13
20044091		10/14/2020	1208	2500 SE 37TH ST, GRIMES	: @CUTTYS CAMPGROUND - GRIM	DISREGAR	ROMP, KEITH	ADMIN	2020	Oct	WE	12	1217	1225	1231	0	14
20044128		10/14/2020	1649	2005 NW PRAIRIE CREEK DR, GRIMES		ADVISED	KRILE, CHALENA	ANI/ALI	2020	Oct	WE	16	1649	1649	1702	0	13

Call ID	Case ID	Date	Time	Address	Loc Com	Disposition	Officer Name	How Receive	Year	Month	DOW	Hour	Time Disp	Time Arrive	Time Clear	TS Hour	TS Minute
20044302		10/15/2020	1925	NE BEAVERBROOKE BLVD / NE GRIMES BLVD, GRIMES		ASSIST	ARNOLD, BRYCE	ADMIN	2020	Oct	TH	19	1926	1933	1933	0	7
20044607		10/17/2020	2102	616 NE 7TH ST, GRIMES		ASSIST	KRILE, CHALENA	ANI/ALI	2020	Oct	SA	21	2103	2106	2122	0	19
20044842		10/19/2020	1554	605 SE 13TH ST, GRIMES		INFO	RINIKER, MICHAEL	ADMIN	2020	Oct	MO	15	1555	1600	1628	0	33
20045216		10/22/2020	0959	300 NE DESTINATION DR, GRIMES	: @MENARDS - GRIM	ASSIST	DAUTOVIC, MEVLID	ANI/ALI	2020	Oct	TH	9	1000	1006	1023	0	23
20045434		10/23/2020	2345	813 SE 10TH LN, GRIMES		ASSIST	RANGEL, ALEXANDRIA	ADMIN	2020	Oct	FR	23	2348	2349	2357	0	9
20045665		10/25/2020	1827	410 SE 4TH ST, GRIMES	: @DALLAS PARK APARTMENTS - GRIM	ADVISED	ARNOLD, BRYCE	ADMIN	2020	Oct	SU	18	1828	1832	1904	0	36
20046585		10/31/2020	2146	155 SW MAPLEWOOD DR, GRIMES	: @GRIMES PARK APARTMENTS - GRIM	ASSIST	ARNOLD, BRYCE	ANI/ALI	2020	Oct	SA	21	2149	2151	2210	0	21
DITCH		**Total = 1**															
20044501	20006250	10/17/2020	0902	W 1ST ST / JAZZWOOD DR NW, GRIMES		ADVISED	BALLENGER, STEVEN	ADMIN	2020	Oct	SA	9	0902	0902	0953	0	51
DOMESTIC		**Total = 12**															
20042183		10/02/2020	0032	155 SW MAPLEWOOD DR, GRIMES	: @GRIMES PARK APARTMENTS - GRIM	ADVISED	LEWELLIN, LARRY	ANI/ALI	2020	Oct	FR	0	0033	0035	0048	0	15

Call ID	Case ID	Date	Time	Address	Loc Com	Disposition	Officer Name	How Receive	Year	Month	DOW	Hour	Time Disp	Time Arrive	Time Clear	TS Hour	TS Minute
20042246	20005944	10/02/2020	1238	1000 SE 11TH ST, GRIMES	: @MEADOWLARK PLACE APARTMENTS - GRIM	CASE	REES, HALEIGH	ADMIN	2020	Oct	FR	12	1241	1244	1523	2	42
20042400		10/03/2020	1111	1000 SE 11TH ST, GRIMES	: @MEADOWLARK PLACE APARTMENTS - GRIM	UTL	BALLENGER, STEVEN	ADMIN	2020	Oct	SA	11	1113	1121	1250	1	37
20042564		10/04/2020	2052	951 SE GATEWAY DR, GRIMES	: @CASEYS - GRIM	ASSIST	MCATEE, JESSE	ADMIN	2020	Oct	SU	20	2054	2057	2111	0	17
20042693		10/05/2020	1555	1900 SE 37TH ST, GRIMES	: @QT - GRIM	ADVISED	KRILE, CHALENA	ADMIN	2020	Oct	MO	15	1558	1614	1704	1	6
20042907		10/06/2020	2129	1000 SE 11TH ST, GRIMES	: @MEADOWLARK PLACE APARTMENTS - GRIM	ADVISED	DOVE, JEREMY	ADMIN	2020	Oct	TU	21	2133	2212	2212	0	39
20043016		10/07/2020	1058	1000 SE 11TH ST, GRIMES	: @MEADOWLARK PLACE APARTMENTS - GRIM	ASSIST	BALLENGER, STEVEN	ADMIN	2020	Oct	WE	10	1059	1108	1212	1	13
20043193	20006075	10/08/2020	1039	209 NW 8TH ST, GRIMES	: @NORTHWAY APARTMENTS - GRIM	ARREST	BALLENGER, STEVEN	ADMIN	2020	Oct	TH	10	1041	1050	1210	1	29
20044438		10/16/2020	1723	200 S JAMES ST, GRIMES	: @JGFD 37	ADVISED	KRILE, CHALENA	ADMIN	2020	Oct	FR	17	1724	1731	1757	0	33

Call ID	Case ID	Date	Time	Address	Loc Com	Disposition	Officer Name	How Receive	Year	Month	DOW	Hour	Time Disp	Time Arrive	Time Clear	TS Hour	TS Minute
20044869		10/19/2020	1943	219 NW 3RD ST, GRIMES		ADVISED	RINIKER, MICHAEL	ADMIN	2020	Oct	MO	19	1943	1946	2015	0	32
20045083	20006345	10/21/2020	0835	219 NW 3RD ST, GRIMES		CASE	DAUTOVIC, MEVLID	ANI/ALI	2020	Oct	WE	8	0837	0840	0906	0	29
20046513		10/31/2020	1111	875 SE GATEWAY DR, GRIMES		ASSIST	BALLENGER, STEVEN	ADMIN	2020	Oct	SA	11	1112	1115	1126	0	14
DPQ		Total = 16															
20042324		10/02/2020	2051	801 SE 16TH ST, GRIMES		ADVISED	DOVE, JEREMY	ADMIN	2020	Oct	FR	20	2052	2056	2058	0	6
20042348		10/02/2020	2344	1000 SE 11TH ST, GRIMES	: @MEADOWLARK PLACE APARTMENTS - GRIM	ADVISED	LOWRY, STEVEN	ADMIN	2020	Oct	FR	23	2345	2352	0000	0	15
20043383		10/09/2020	1738	600-B NE 8TH ST, GRIMES		UTL	KRILE, CHALENA	ADMIN	2020	Oct	FR	17	1740	1747	1751	0	11
20043543		10/10/2020	2031	400 NW 27TH ST, GRIMES	: @NORTH RIDGE ELEMENTARY SCHOOL - GRIM	ADVISED	RINIKER, MICHAEL	ADMIN	2020	Oct	SA	20	2031	2038	2043	0	12
20043559		10/10/2020	2230	600-B NE MAIN ST, GRIMES		UTL	KAY, DONALD	ADMIN	2020	Oct	SA	22	2232	2232	2248	0	16
20043560		10/10/2020	2241	440 NW PRAIRIE CREEK DR, GRIMES		ADVISED	KAY, DONALD	ANI/ALI	2020	Oct	SA	22	2242	2251	2255	0	13
20043711		10/12/2020	0214	605 SE GATEWAY DR, GRIMES		CHECKS O	HADSALL, MATTHEW	ANI/ALI	2020	Oct	MO	2	0217	0217	0223	0	6

Call ID	Case ID	Date	Time	Address	Loc Com	Disposition	Officer Name	How Receive	Year	Month	DOW	Hour	Time Disp	Time Arrive	Time Clear	TS Hour	TS Minute
20044615		10/17/2020	2238	NE BRIDGE CREEK CROSSING / NE PARK DR, GRIMES		ADVISED	GOOD, ADAM	ADMIN	2020	Oct	SA	22	2239	2245	2325	0	46
20044728		10/18/2020	2050	2908 SE STONEGATE DR, GRIMES		ADVISED	BACH, BRYAN	ADMIN	2020	Oct	SU	20	2110	2121	2232	1	22
20045173		10/22/2020	0000	1000 SE 11TH ST, GRIMES	: @MEADOWLARK PLACE APARTMENTS - GRIM	CHECKS O	RANGEL, ALEXANDRIA	ADMIN	2020	Oct	TH	0	0001	0004	0010	0	9
20045574		10/24/2020	2315	1000 SE 11TH ST, GRIMES	: @MEADOWLARK PLACE APARTMENTS - GRIM	ADVISED	GOOD, ADAM	ADMIN	2020	Oct	SA	23	2316	2322	2325	0	9
20045582		10/25/2020	0023	755 SE GATEWAY DR, GRIMES		ADVISED	GOOD, ADAM	ADMIN	2020	Oct	SU	0	0024	0024	0032	0	8
20045594		10/25/2020	0242	1951 N JAMES ST, GRIMES		ADVISED	RANGEL, ALEXANDRIA	ADMIN	2020	Oct	SU	2	0245	0252	0256	0	11
20045829		10/26/2020	1807	700-B NE 8TH ST, GRIMES		CHECKS O	ARNOLD, BRYCE	ADMIN	2020	Oct	MO	18	1857	1857	1901	0	4
20045848		10/26/2020	2211	725 SE GATEWAY DR, GRIMES		ADVISED	GOOD, ADAM	ADMIN	2020	Oct	MO	22	2217	2218	2223	0	6
20046278		10/29/2020	2001	600-B NE 8TH ST, GRIMES		UTL	CORY, IAN	ADMIN	2020	Oct	TH	20	2002	2010	2014	0	12
FIGHT		**Total = 1**															
20045584		10/25/2020	0045	204 SE MAIN ST, GRIMES	: @STEVIE CS - GRIM	ASSIST	REES, HALEIGH	ANI/ALI	2020	Oct	SU	0	0045	0049	0108	0	23

Call ID	Case ID	Date	Time	Address	Loc Com	Disposition	Officer Name	How Receive	Year	Month	DOW	Hour	Time Disp	Time Arrive	Time Clear	TS Hour	TS Minute
FOLLOW		Total = 14															
20042081		10/01/2020	0918	1301 SE GATEWAY DR, GRIMES		ADVISED	BALLENGER, STEVEN	OFFICER	2020	Oct	TH	9	0918	0918	0939	0	21
20042266		10/02/2020	1531	1120 SE 11TH ST, GRIMES	: @MEADOWLARK PLACE APARTMENTS - GRIM	UTL	FISHER, CHRISTOPHER	OFFICER	2020	Oct	FR	15	1531	1531	1614	0	43
20042385		10/03/2020	0859	1120 SE 11TH ST, GRIMES	: @MEADOWLARK PLACE APARTMENTS - GRIM	ADVISED	FISHER, CHRISTOPHER	OFFICER	2020	Oct	SA	8	0859	0859	0912	0	13
20042725		10/05/2020	1916	251 SE GATEWAY CIR, GRIMES	: @AMERICINN - GRIM	ASSIST	MAY, JOHN	OFFICER	2020	Oct	MO	19	1916	1916	1941	0	25
20042952		10/07/2020	0358	3103 SE COVENANT DR, GRIMES			SCHUTTE, ROBERT	OFFICER	2020	Oct	WE	3	0358	0358	0403	0	5
20043482		10/10/2020	1029	3600 SE GATEWAY DR, GRIMES	: @LOCKBOX STORAGE - GRIM	ADVISED	KINNEY, PHILIP	ADMIN	2020	Oct	SA	10	1031	1036	1102	0	31
20044126		10/14/2020	1632	1650 SE 37TH ST, GRIMES	: @TOYOTA OF DES MOINES - GRIM	CANCELEV		ADMIN	2020	Oct	WE	16	0000	0000	1641	0	0
20045518		10/24/2020	1459	3104 SE LIBERTY DR, GRIMES		ADVISED	ARNOLD, BRYCE	OFFICER	2020	Oct	SA	14	1459	1459	1514	0	15
20045554		10/24/2020	1919	3105 SE LIBERTY DR, GRIMES		NODP	ARNOLD, BRYCE	OFFICER	2020	Oct	SA	19	1919	1919	1933	0	14

Call ID	Case ID	Date	Time	Address	Loc Com	Disposition	Officer Name	How Receive	Year	Month	DOW	Hour	Time Disp	Time Arrive	Time Clear	TS Hour	TS Minute
20045890		10/27/2020	0833	601 SE DOVETAIL RD, GRIMES		ADVISED	BALLENGER, STEVEN	ADMIN	2020	Oct	TU	8	0834	0836	0848	0	14
20045950		10/27/2020	1533	1322 NE BEAVERBROOKE BLVD, GRIMES	:EST LL(-93.7798,41.7000)	ADVISED	ARNOLD, BRYCE	OFFICER	2020	Oct	TU	15	1533	1533	1543	0	10
20045964		10/27/2020	1636	1308 NW 7TH CT, GRIMES		CHECKS O	CLINE, TROY	OFFICER	2020	Oct	TU	16	1637	1637	1705	0	28
20046379		10/30/2020	1057	2150 E 1ST ST, GRIMES	: @WALMART - GRIM	EXCHANGE	ARCURI, CHRISTIE	OFFICER	2020	Oct	FR	10	1057	1057	1107	0	10
20046400		10/30/2020	1402	2150 E 1ST ST, GRIMES	: @WALMART - GRIM	CASE	ARCURI, CHRISTIE	ADMIN	2020	Oct	FR	14	1403	1408	1423	0	20
FOUND		**Total = 5**															
20042249	20005945	10/02/2020	1304	1800 SE GATEWAY DR, GRIMES	: @ADESA AUTO AUCTION - GRIM	CASE	BALLENGER, STEVEN	ADMIN	2020	Oct	FR	13	1315	1336	1405	0	50
20044077		10/14/2020	1011	951 SE GATEWAY DR, GRIMES	: @CASEYS - GRIM	ADVISED	DAUTOVIC, MEVLID	ADMIN	2020	Oct	WE	10	1019	1019	1033	0	14
20044563		10/17/2020	1715	3300 SE CROSSROADS DR, GRIMES		UTL	ARNOLD, BRYCE	ADMIN	2020	Oct	SA	17	1716	1732	1733	0	17
20045214		10/22/2020	0934	2150 E 1ST ST, GRIMES	: @WALMART - GRIM	INFO	KINNEY, PHILIP	ADMIN	2020	Oct	TH	9	0934	0943	1000	0	26
20045509	20006408	10/24/2020	1415	101 NE HARVEY ST, GRIMES	: @CITY HALL - GRIM	ADVISED	CAHILL, DEVAN	OFFICER	2020	Oct	SA	14	1415	1415	1642	2	27

Call ID	Case ID	Date	Time	Address	Loc Com	Disposition	Officer Name	How Receive	Year	Month	DOW	Hour	Time Disp	Time Arrive	Time Clear	TS Hour	TS Minute
FRAUD		Total = 9															
20042236	20005939	10/02/2020	1106	904 SE CROSSINGS LN, GRIMES		CASE	BALLENGER, STEVEN	ADMIN	2020	Oct	FR	11	1107	1108	1141	0	34
20042309		10/02/2020	1931	703 SE DOVETAIL RD, GRIMES		ADVISED	BALLENGER, STEVEN	ADMIN	2020	Oct	FR	19	1934	1939	2005	0	31
20042410	20005967	10/03/2020	1214	703 SE DOVETAIL RD, GRIMES		CASE	BALLENGER, STEVEN	ADMIN	2020	Oct	SA	12	1215	1215	1320	1	5
20042628	20005991	10/05/2020	0838	1050 SW BROOKSIDE CIR, GRIMES	: @HAWKEYE COMMODITIES - GRIM	CASE	DAUTOVIC, MEVLID	ADMIN	2020	Oct	MO	8	0839	0851	1037	1	58
20043837	20006158	10/12/2020	2050	2250 E 1ST ST, GRIMES		CASE	ARCURI, CHRISTIE	ADMIN	2020	Oct	MO	20	2050	2055	2115	0	25
20044114	20006201	10/14/2020	1518	1650 SE 37TH ST, GRIMES	: @TOYOTA OF DES MOINES - GRIM	CASE	RINIKER, MICHAEL	ADMIN	2020	Oct	WE	15	1519	1535	1733	2	14
20044936	20006321	10/20/2020	0933	308 SE CEDARWOOD DR, GRIMES		CASE	HAKE, MICHAEL	ADMIN	2020	Oct	TU	9	0934	0939	1024	0	50
20045835	20006468	10/26/2020	1953	421 SE GATEWAY DR, GRIMES	: @DOLLAR GENERAL - GRIM	CASE	GOOD, ADAM	ADMIN	2020	Oct	MO	19	2002	2010	2029	0	27
20046389	20006566	10/30/2020	1223	303 SW CREEKSIDE CT, GRIMES		CASE	DAUTOVIC, MEVLID	ADMIN	2020	Oct	FR	12	1226	1235	1334	1	8
HARASS		Total = 5															
20042704	20006008	10/05/2020	1700	301 NW 10TH CIR, GRIMES		ADVISED	KRILE, CHALENA	ADMIN	2020	Oct	MO	17	1705	1718	1747	0	42

Call ID	Case ID	Date	Time	Address	Loc Com	Disposition	Officer Name	How Receive	Year	Month	DOW	Hour	Time Disp	Time Arrive	Time Clear	TS Hour	TS Minute
20045218	20006361	10/22/2020	1011	1213 SW 4TH ST, GRIMES		CASE	DAUTOVIC, MEVLID	ADMIN	2020	Oct	TH	10	1015	1054	1113	0	58
20045561	20006413	10/24/2020	2013	1355 SE 6TH ST, GRIMES		CASE	KRILE, CHALENA	ADMIN	2020	Oct	SA	20	2015	2033	2101	0	46
20046121		10/28/2020	1845	901 SW TIMBERVIEW DR, GRIMES		ADVISED	NYSTROM, KIRSTEN	ADMIN	2020	Oct	WE	18	1849	1901	1914	0	25
20046271		10/29/2020	1908	1345 SE 6TH ST, GRIMES		ADVISED	MAY, JOHN	ADMIN	2020	Oct	TH	19	1910	1910	1953	0	43
HAZMAT		**Total = 3**															
20043197		10/08/2020	1100	1300 SE GATEWAY DR, GRIMES		ADVISED		ADMIN	2020	Oct	TH	11	1101	1101	1145	0	44
20043206		10/08/2020	1227	1300 SE GATEWAY DR, GRIMES	: @SKY ZONE - GRIM	ADVISED		ADMIN	2020	Oct	TH	12	1228	1228	1239	0	11
20044391		10/16/2020	1146	3600 SE GLENSTONE DR, GRIMES		ASSIST	DAUTOVIC, MEVLID	ADMIN	2020	Oct	FR	11	1147	1157	1200	0	13
HITRUN		**Total = 5**															
20043270	20006087	10/08/2020	2214	SE 37TH ST / SE GRIMES BLVD, GRIMES		CASE	KRILE, CHALENA	ANI/ALI	2020	Oct	TH	22	2215	2217	2244	0	29
20045420	20006395	10/23/2020	2112	3105 SE LIBERTY DR, GRIMES		CASE	ARNOLD, BRYCE	ADMIN	2020	Oct	FR	21	2113	2122	2143	0	30
20046131	20006526	10/28/2020	2044	1101 NE JACOB ST, GRIMES		CASE	NYSTROM, KIRSTEN	ANI/ALI	2020	Oct	WE	20	2046	2051	2140	0	54
20046174	20006531	10/29/2020	0333	1301 SE GATEWAY DR, GRIMES		CASE		ADMIN	2020	Oct	TH	3	0334	0338	0350	0	16

Call ID	Case ID	Date	Time	Address	Loc Com	Disposition	Officer Name	How Receive	Year	Month	DOW	Hour	Time Disp	Time Arrive	Time Clear	TS Hour	TS Minute
20046541		10/31/2020	1557	1120 SE 11TH ST, GRIMES	: @MEADOWLARK PLACE APARTMENTS - GRIM	ADVISED	BACH, BRYAN	ANI/ALI	2020	Oct	SA	15	1557	1618	1618	0	21
INCOMP		**Total = 12**															
20042707		10/05/2020	1704	101 SE DESTINATION DR, GRIMES	: @GRIMES FAMILY PHYSICIANS - GRIM	ADVISED	KRILE, CHALENA	ANI/ALI	2020	Oct	MO	17	1705	1705	1712	0	7
20042994		10/07/2020	0905	1000 SE 19TH ST, GRIMES		ADVISED	BALLENGER, STEVEN	ANI/ALI	2020	Oct	WE	9	0906	0909	0911	0	5
20043380		10/09/2020	1723	503 NW 6TH ST, GRIMES		ADVISED	ARNOLD, BRYCE	ANI/ALI	2020	Oct	FR	17	1724	1728	1743	0	19
20044096		10/14/2020	1231	3155 SE MIEHE DR, GRIMES	: @HEARTLAND HEATING & COOLING (SUITE 1) - GRIM	CHECKS O	DAUTOVIC, MEVLID	ANI/ALI	2020	Oct	WE	12	1232	1232	1234	0	2
20045228		10/22/2020	1206	2570 E 1ST ST, GRIMES		CHECKS O	DAUTOVIC, MEVLID	ANI/ALI	2020	Oct	TH	12	1210	1210	1212	0	2
20045359		10/23/2020	1118	612 NE 13TH ST, GRIMES		ADVISED	DAUTOVIC, MEVLID	ANI/ALI	2020	Oct	FR	11	1119	1126	1131	0	12
20045369		10/23/2020	1324	200 SW BROOKSIDE DR, GRIMES	: @KENNYBROOK VILLAGE - GRIM	ADVISED	DAUTOVIC, MEVLID	ADMIN	2020	Oct	FR	13	1326	1350	1354	0	28
20045758		10/26/2020	1003	1000 SE 19TH ST, GRIMES		CHECKS O	BALLENGER, STEVEN	ANI/ALI	2020	Oct	MO	10	1004	1008	1027	0	23

Call ID	Case ID	Date	Time	Address	Loc Com	Disposition	Officer Name	How Receive	Year	Month	DOW	Hour	Time Disp	Time Arrive	Time Clear	TS Hour	TS Minute
20045918		10/27/2020	1058	500 SE 17TH ST, GRIMES		UTL	BALLENGER, STEVEN	ADMIN	2020	Oct	TU	10	1100	1103	1118	0	18
20046037		10/28/2020	0830	200 SW BROOKSIDE DR, GRIMES	: @KENNYBROOK VILLAGE - GRIM	ADVISED	HAKE, MICHAEL	ANI/ALI	2020	Oct	WE	8	0831	0834	0837	0	6
20046190		10/29/2020	0646	302 E 1ST ST, GRIMES		ADVISED	DAUTOVIC, MEVLID	ADMIN	2020	Oct	TH	6	0647	0650	0653	0	6
20046506		10/31/2020	0827	503 NW 6TH ST, GRIMES		ASSIST	MCATEE, JESSE	ANI/ALI	2020	Oct	SA	8	0828	0829	0836	0	8
INFO		**Total = 7**															
20042176		10/01/2020	2320	735 SE GATEWAY DR, GRIMES		TOUR	SCHUTTE, ROBERT	ADMIN	2020	Oct	TH	23	0427	0427	0830	4	3
20042815		10/06/2020	1046	SE GRIMES BLVD / I80 WB ON RMP, GRIMES		ADVISED		ADMIN	2020	Oct	TU	10	1418	1418	1709	2	51
20043624		10/11/2020	1142	300 NE DESTINATION DR, GRIMES	: @MENARDS - GRIM			ADMIN	2020	Oct	SU	11	1147	1147	1147	0	0
20043674		10/11/2020	1922	806 SE CROSSINGS LN, GRIMES		ADVISED	RINIKER, MICHAEL	ADMIN	2020	Oct	SU	19	1923	1927	1936	0	13
20043920	20006172	10/13/2020	1010	351 SE GATEWAY DR, GRIMES	: @FAREWAY - GRIM	CASE	KINNEY, PHILIP	ADMIN	2020	Oct	TU	10	1011	1014	1104	0	53
20045148		10/21/2020	1818	128TH ST / S JAMES ST, GRIMES		TOUR	RINIKER, MICHAEL	ADMIN	2020	Oct	WE	18	1909	1909	2225	3	16
20046318		10/30/2020	0113	1450 NE BEAVERBROOKE BLVD, GRIMES	: @KWIK STAR - GRIM	INFO	GOOD, ADAM	OFFICER	2020	Oct	FR	1	0113	0113	0123	0	10

Call ID	Case ID	Date	Time	Address	Loc Com	Disposition	Officer Name	How Receive	Year	Month	DOW	Hour	Time Disp	Time Arrive	Time Clear	TS Hour	TS Minute
INVESTIG		**Total = 5**															
20044331		10/15/2020	2239	1250 SE 11TH ST, GRIMES	: @MEADOWLARK PLACE APARTMENTS - GRIM			ADMIN	2020	Oct	TH	22	2240	2240	2240	0	0
20044732		10/18/2020	2155	1250 SE 11TH ST, GRIMES	: @MEADOWLARK PLACE APARTMENTS - GRIM	BROA		ADMIN	2020	Oct	SU	21	2308	2308	0015	1	7
20045682		10/25/2020	2233	1250 SE 11TH ST, GRIMES	: @MEADOWLARK PLACE APARTMENTS - GRIM	INFO	GOOD, ADAM	ADMIN	2020	Oct	SU	22	2234	2234	2234	0	0
20046188		10/29/2020	0622	1412 NE PARK ST, GRIMES		INFO	DAUTOVIC, MEVLID	ADMIN	2020	Oct	TH	6	0625	0625	0625	0	0
20046484		10/31/2020	0210	2949 NE BRENTWOOD CIR, GRIMES			WARD, GREGORY	ANI/ALI	2020	Oct	SA	2	0211	0214	0226	0	15
KEYS		**Total = 15**															
20042080		10/01/2020	0912	2150 E 1ST ST, GRIMES	: @WALMART - GRIM	ASSIST	DAUTOVIC, MEVLID	ADMIN	2020	Oct	TH	9	0912	0917	0924	0	12
20042430		10/03/2020	1610	601 NW VALLEY VIEW DR, GRIMES		ADVISED	BACH, BRYAN	ADMIN	2020	Oct	SA	16	1611	1617	1623	0	12
20042437		10/03/2020	1636	712 NE 6TH ST, GRIMES		ADVISED	BACH, BRYAN	ADMIN	2020	Oct	SA	16	1641	1642	1654	0	13

Call ID	Case ID	Date	Time	Address	Loc Com	Disposition	Officer Name	How Receive	Year	Month	DOW	Hour	Time Disp	Time Arrive	Time Clear	TS Hour	TS Minute
20042838		10/06/2020	1330	400 SE GATEWAY DR, GRIMES	: @POST OFFICE - GRIM	ADVISED	DAUTOVIC, MEVLID	ADMIN	2020	Oct	TU	13	1330	1330	1345	0	15
20043080		10/07/2020	1749	104 SE MAIN ST, GRIMES		ASSIST	ARNOLD, BRYCE	ADMIN	2020	Oct	WE	17	1753	1755	1812	0	19
20043477		10/10/2020	0952	875 SE GATEWAY DR, GRIMES		ASSIST	BALLENGER, STEVEN	ADMIN	2020	Oct	SA	9	0952	0956	1023	0	31
20043512		10/10/2020	1532	2055 E 1ST ST, GRIMES	: @ALDI - GRIM	ASSIST	RINIKER, MICHAEL	ADMIN	2020	Oct	SA	15	1533	1543	1553	0	20
20043663		10/11/2020	1730	1350 SE GATEWAY DR, GRIMES		CANCEL	RINIKER, MICHAEL	ADMIN	2020	Oct	SU	17	1731	1738	1740	0	9
20044123		10/14/2020	1614	2351 E 1ST ST, GRIMES	: @KWIK STAR - GRIM	ASSIST	GREGO, SHANE	ANI/ALI	2020	Oct	WE	16	1623	1634	1641	0	18
20044312		10/15/2020	2022	503 SE 2ND ST, GRIMES		ASSIST	KRILE, CHALENA	ADMIN	2020	Oct	TH	20	2027	2027	2041	0	14
20044378		10/16/2020	0950	1301 NE FRANCES AVE, GRIMES		ASSIST	HOMEISTER, WESLEY	ADMIN	2020	Oct	FR	9	0953	1003	1007	0	14
20044587		10/17/2020	1911	2150 E 1ST ST, GRIMES	: @WALMART - GRIM	ASSIST	KRILE, CHALENA	ADMIN	2020	Oct	SA	19	1913	1913	1927	0	14
20045493		10/24/2020	1145	300 NE DESTINATION DR, GRIMES	: @MENARDS - GRIM	ASSIST	BALLENGER, STEVEN	ANI/ALI	2020	Oct	SA	11	1149	1201	1207	0	18
20045896		10/27/2020	0901	2612 NE CHEVALIA CT, GRIMES		ASSIST	KINNEY, PHILIP	ADMIN	2020	Oct	TU	9	0902	0915	0921	0	19

Call ID	Case ID	Date	Time	Address	Loc Com	Disposition	Officer Name	How Receive	Year	Month	DOW	Hour	Time Disp	Time Arrive	Time Clear	TS Hour	TS Minute
20046367		10/30/2020	0919	2900 SW BROOKSIDE DR, GRIMES	: @FED EX GROUND - GRIM	ASSIST	DAUTOVIC, MEVLID	ADMIN	2020	Oct	FR	9	0921	0926	0939	0	18
LMV		**Total = 4**															
20042788	20006016	10/06/2020	0736	2000 SE 37TH ST, GRIMES	: @AUTO RESCUE DETAILING - GRIM	CASE	DAUTOVIC, MEVLID	ADMIN	2020	Oct	TU	7	0737	0752	0934	1	57
20045243	20006369	10/22/2020	1353	512 NE MAIN ST, GRIMES		CASE	DAUTOVIC, MEVLID	ADMIN	2020	Oct	TH	13	1353	1357	1523	1	30
20045827	20006467	10/26/2020	1802	601 SE DOVETAIL RD, GRIMES		CASE	GOOD, ADAM	ADMIN	2020	Oct	MO	18	1803	1809	1935	1	32
20045845		10/26/2020	2131	SE 11TH ST / SE DOVETAIL RD, GRIMES		CASE	CORY, IAN	ADMIN	2020	Oct	MO	21	2132	2133	2324	1	52
MENTAL		**Total = 7**															
20043042		10/07/2020	1435	504 NW CALISTA CT, GRIMES		ASSIST	KINNEY, PHILIP	ANI/ALI	2020	Oct	WE	14	1437	1446	1509	0	32
20043405	20006105	10/09/2020	2054	705 SE SILKWOOD LN, GRIMES		ADVISED	KRILE, CHALENA	ADMIN	2020	Oct	FR	20	2054	2100	2150	0	56
20044693		10/18/2020	1437	2055 E 1ST ST, GRIMES	: @ALDI - GRIM	ADVISED	ARNOLD, BRYCE	ADMIN	2020	Oct	SU	14	1437	1438	1453	0	16
20044725	20006285	10/18/2020	2001	208 NE 2ND ST, GRIMES		ASSIST	ARNOLD, BRYCE	ADMIN	2020	Oct	SU	20	2003	2008	2231	2	28
20044727		10/18/2020	2029	208 NE 2ND ST, GRIMES		CANCELEV		ADMIN	2020	Oct	SU	20	0000	0000	2030	0	0

Call ID	Case ID	Date	Time	Address	Loc Com	Disposition	Officer Name	How Receive	Year	Month	DOW	Hour	Time Disp	Time Arrive	Time Clear	TS Hour	TS Minute
20045902		10/27/2020	0926	200 SW BROOKSIDE DR, GRIMES	: @KENNYBROOK VILLAGE - GRIM	UTL	KINNEY, PHILIP	ANI/ALI	2020	Oct	TU	9	0933	0938	0948	0	15
20046135	20006527	10/28/2020	2107	1705 NW MORNINGSIDE DR, GRIMES		CASE	ARNOLD, BRYCE	ANI/ALI	2020	Oct	WE	21	2109	2111	2216	1	7
MESSAGE		**Total = 2**															
20044379		10/16/2020	0959	1900 SE 28TH ST, GRIMES	: @PARK VIEW VILLAGE MOBILE HOME PARK - GRIM	ADVISED	BALLENGER, STEVEN	ADMIN	2020	Oct	FR	9	0959	0959	1020	0	21
20045336		10/23/2020	0810	251 SE GATEWAY CIR, GRIMES	: @AMERICINN - GRIM	ADVISED	BALLENGER, STEVEN	ADMIN	2020	Oct	FR	8	0811	0811	0821	0	10
MISC		**Total = 1**															
20044099	20006198	10/14/2020	1302	2150 E 1ST ST, GRIMES	: @WALMART - GRIM	CASE	KINNEY, PHILIP	ADMIN	2020	Oct	WE	13	1327	1406	1406	0	39
MISSING		**Total = 2**															
20042689		10/05/2020	1545	309 NW 23RD CT, GRIMES		ASSIST	DOVE, JEREMY	ADMIN	2020	Oct	MO	15	1547	1552	1559	0	12
20043083		10/07/2020	1808	3103 SE COVENANT DR, GRIMES		ADVISED	KRILE, CHALENA	ADMIN	2020	Oct	WE	18	1809	1819	1833	0	24
NARC		**Total = 1**															
20043705		10/12/2020	0107	1889 SE MIEHE DR, GRIMES		ADVISED	WARD, GREGORY	ADMIN	2020	Oct	MO	1	0108	0112	0131	0	23

Call ID	Case ID	Date	Time	Address	Loc Com	Disposition	Officer Name	How Receive	Year	Month	DOW	Hour	Time Disp	Time Arrive	Time Clear	TS Hour	TS Minute
OPEN		Total = 5															
20042581		10/04/2020	2324	3600 SE GATEWAY DR, GRIMES	: @LOCKBOX STORAGE - GRIM	CHECKS O	HADSALL, MATTHEW	OFFICER	2020	Oct	SU	23	2338	2338	2338	0	0
20043573		10/11/2020	0021	2000 SE 37TH ST, GRIMES	: @AUTO RESCUE DETAILING - GRIM	CHECKS O	HADSALL, MATTHEW	OFFICER	2020	Oct	SU	0	0021	0021	0027	0	6
20044321		10/15/2020	2141	3050 SE MIEHE DR, GRIMES		ADVISED	ARNOLD, BRYCE	OFFICER	2020	Oct	TH	21	2141	2141	2142	0	1
20045569		10/24/2020	2254	1650 SE 37TH ST, GRIMES	: @TOYOTA OF DES MOINES - GRIM	ASSIST	RANGEL, ALEXANDRIA	OFFICER	2020	Oct	SA	22	2254	2254	2302	0	8
20046178		10/29/2020	0342	3505 SE MIEHE DR, GRIMES	: @WOODLAND FAIR CONSTRUCTION - GRIM	ADVISED	SNOOK, MICHAEL	OFFICER	2020	Oct	TH	3	0342	0342	0349	0	7
OWI		Total = 1															
20045152		10/21/2020	1908	1450 NE GATEWAY CT, GRIMES		BROA		ANI/ALI	2020	Oct	WE	19	1909	1909	1915	0	6
PARK		Total = 12															
20042091		10/01/2020	1039	2150 E 1ST ST, GRIMES	: @WALMART - GRIM	GREENTAG	BALLENGER, STEVEN	OFFICER	2020	Oct	TH	10	1039	1039	1042	0	3
20042096		10/01/2020	1219	200-B NW 10TH CIR, GRIMES		ADVISED	DAUTOVIC, MEVLID	ADMIN	2020	Oct	TH	12	1219	1226	1231	0	12
20042691		10/05/2020	1547	811 NE 11TH ST, GRIMES		ADVISED	DOVE, JEREMY	ADMIN	2020	Oct	MO	15	1604	1611	1619	0	15

Call ID	Case ID	Date	Time	Address	Loc Com	Disposition	Officer Name	How Receive	Year	Month	DOW	Hour	Time Disp	Time Arrive	Time Clear	TS Hour	TS Minute
20042692		10/05/2020	1547	311 SW HICKORY CIR, GRIMES		ADVISED	DOVE, JEREMY	ADMIN	2020	Oct	MO	15	1620	1627	1634	0	14
20042917		10/06/2020	2324	1002 NE 21ST ST, GRIMES		CHECKS O	SCHUTTE, ROBERT	ADMIN	2020	Oct	TU	23	2326	2334	2349	0	23
20043172		10/08/2020	0830	1000-B NE 19TH ST, GRIMES		CITATION	BALLENGER, STEVEN	OFFICER	2020	Oct	TH	8	0830	0830	0841	0	11
20043173		10/08/2020	0845	1000-BLK NE 21ST ST, GRIMES		CITATION	BALLENGER, STEVEN	OFFICER	2020	Oct	TH	8	0845	0845	0852	0	7
20043181		10/08/2020	0916	500-BLK NW 13TH ST, GRIMES		CITATION	BALLENGER, STEVEN	OFFICER	2020	Oct	TH	9	0916	0916	0921	0	5
20043783		10/12/2020	1416	1541 SE 3RD ST, GRIMES	: @HYVEE CLINIC PHARMACY - GRIM	DISREGAR	KINNEY, PHILIP	ADMIN	2020	Oct	MO	14	1424	1438	1448	0	24
20045346		10/23/2020	0948	1218 NW 3RD ST, GRIMES		GREENTAG	BALLENGER, STEVEN	ADMIN	2020	Oct	FR	9	0949	1002	1014	0	25
20045364		10/23/2020	1238	1450 NE BEAVERBROOKE BLVD, GRIMES	: @KWIK STAR - GRIM	ADVISED	BALLENGER, STEVEN	ADMIN	2020	Oct	FR	12	1238	1243	1404	1	26
20045924		10/27/2020	1124	200-B NE LITTLE BEAVER DR, GRIMES		GREENTAG	KINNEY, PHILIP	ADMIN	2020	Oct	TU	11	1125	1128	1139	0	14
PROWL		**Total = 1**															
20044326		10/15/2020	2207	504 SE 17TH ST, GRIMES		CHECKS O	ARNOLD, BRYCE	ANI/ALI	2020	Oct	TH	22	2208	2213	2236	0	28

Call ID	Case ID	Date	Time	Address	Loc Com	Disposition	Officer Name	How Receive	Year	Month	DOW	Hour	Time Disp	Time Arrive	Time Clear	TS Hour	TS Minute
PUBLIC		Total = 13															
20043252		10/08/2020	1912	1001 S JAMES ST, GRIMES	: @ST PETERS LUTHERAN CHURCH - GRIM	CHECKS O	KRILE, CHALENA	ADMIN	2020	Oct	TH	19	1913	1915	1928	0	15
20043891		10/13/2020	0751	500 S JAMES ST, GRIMES	: @SOUTH PRAIRIE ELEMENTARY SCHOOL - GRIM	ASSIST	DAUTOVIC, MEVLID	OFFICER	2020	Oct	TU	7	0751	0751	0814	0	23
20044037		10/14/2020	0152	200-B SE MAIN ST, GRIMES		CHECKS O	HADSALL, MATTHEW	OFFICER	2020	Oct	WE	1	0152	0152	0200	0	8
20044484		10/17/2020	0154	1905 SE 37TH ST, GRIMES	: @KRUEGERS BP AMOCO - GRIM	ASSIST	RANGEL, ALEXANDRIA	OFFICER	2020	Oct	SA	1	0154	0154	0211	0	17
20045144		10/21/2020	1806	1884 SE DESTINATION DR, GRIMES		ASSIST	KRILE, CHALENA	OFFICER	2020	Oct	WE	18	1806	1806	1812	0	6
20045257		10/22/2020	1617	607 SE EWING ST, GRIMES		ADVISED	MUMM, JARRED	ANI/ALI	2020	Oct	TH	16	1627	1644	1644	0	17
20045972		10/27/2020	1731	SE 10TH LN / SE CROSSINGS LN, GRIMES		ASSIST	ARCURI, CHRISTIE	OFFICER	2020	Oct	TU	17	1731	1731	1735	0	4
20046086		10/28/2020	1447	1900 SE 37TH ST, GRIMES	: @QT - GRIM	ADVISED	ARNOLD, BRYCE	ADMIN	2020	Oct	WE	14	1448	1505	1545	0	57
20046283		10/29/2020	2024	2500 SE 37TH ST, GRIMES	: @CUTTYS CAMPGROUND - GRIM	ASSIST	CORY, IAN	ADMIN	2020	Oct	TH	20	2027	2043	2058	0	31

Call ID	Case ID	Date	Time	Address	Loc Com	Disposition	Officer Name	How Receive	Year	Month	DOW	Hour	Time Disp	Time Arrive	Time Clear	TS Hour	TS Minute
20046285		10/29/2020	2046	411 W 1ST ST, GRIMES		ADVISED	MAY, JOHN	ANI/ALI	2020	Oct	TH	20	2048	2053	2109	0	21
20046347		10/30/2020	0722	723 NE 5TH ST, GRIMES		CHECKS O	DAUTOVIC, MEVLID	OFFICER	2020	Oct	FR	7	0722	0722	0754	0	32
20046350		10/30/2020	0757	509 SE JACOB ST, GRIMES		ASSIST	ARCURI, CHRISTIE	OFFICER	2020	Oct	FR	7	0757	0757	0807	0	10
20046559		10/31/2020	1751	1117 NE JACOB ST, GRIMES		ADVISED	BACH, BRYAN	ANI/ALI	2020	Oct	SA	17	1753	1759	1809	0	16
RADAR		**Total = 60**															
20042054		10/01/2020	0234	395 SE GRIMES BLVD, GRIMES		ADVISED	SCHUTTE, ROBERT	OFFICER	2020	Oct	TH	2	0234	0234	0301	0	27
20042056		10/01/2020	0316	1782 NE GRIMES BLVD, GRIMES		CHECKS O	RANGEL, ALEXANDRIA	OFFICER	2020	Oct	TH	3	0316	0316	0333	0	17
20042074		10/01/2020	0819	783 N JAMES ST, GRIMES		CHECKS O	DAUTOVIC, MEVLID	OFFICER	2020	Oct	TH	8	0819	0819	0828	0	9
20042195		10/02/2020	0326	228 SE 19TH ST, GRIMES		CANCEL	HADSALL, MATTHEW	OFFICER	2020	Oct	FR	3	0326	0326	0343	0	17
20042304		10/02/2020	1857	1043 S JAMES ST, GRIMES		CANCEL	DOVE, JEREMY	OFFICER	2020	Oct	FR	18	1857	1857	1904	0	7
20042452		10/03/2020	1845	500 NE MAIN ST, GRIMES		TOUR	JOHNSON, BRIAN	OFFICER	2020	Oct	SA	18	1845	1845	1846	0	1
20042488		10/04/2020	0231	1786 NE GRIMES BLVD, GRIMES		TOUR	KAY, DONALD	OFFICER	2020	Oct	SU	2	0231	0231	0245	0	14
20042609		10/05/2020	0334	1782 NE GRIMES BLVD, GRIMES		UTL	RANGEL, ALEXANDRIA	OFFICER	2020	Oct	MO	3	0334	0334	0351	0	17

Call ID	Case ID	Date	Time	Address	Loc Com	Disposition	Officer Name	How Receive	Year	Month	DOW	Hour	Time Disp	Time Arrive	Time Clear	TS Hour	TS Minute
20042764		10/06/2020	0154	1782 NE GRIMES BLVD, GRIMES		CHECKS O	RANGEL, ALEXANDRIA	OFFICER	2020	Oct	TU	1	0302	0302	0302	0	0
20042779		10/06/2020	0552	508 S JAMES ST, GRIMES		ADVISED	HADSALL, MATTHEW	OFFICER	2020	Oct	TU	5	0552	0552	0558	0	6
20042832		10/06/2020	1237	302 SE GRIMES BLVD, GRIMES		NODP	DAUTOVIC, MEVLID	OFFICER	2020	Oct	TU	12	1237	1237	1303	0	26
20042962		10/07/2020	0557	1786 NE GRIMES BLVD, GRIMES		CHECKS O	RANGEL, ALEXANDRIA	OFFICER	2020	Oct	WE	5	0557	0557	0611	0	14
20042970		10/07/2020	0716	300-B SW BROOKSIDE DR, GRIMES		ADVISED	BALLENGER, STEVEN	OFFICER	2020	Oct	WE	7	0739	0739	0746	0	7
20043068		10/07/2020	1628	321 SE DESTINATION DR, GRIMES	:EST LL(-93.7691,41.6863)	CHECKS O	ARNOLD, BRYCE	OFFICER	2020	Oct	WE	16	1628	1628	1700	0	32
20043079		10/07/2020	1746	2100 NE PARK DR, GRIMES		ADVISED	KRILE, CHALENA	OFFICER	2020	Oct	WE	17	1807	1807	1807	0	0
20043135		10/08/2020	0109	1788 NE GRIMES BLVD, GRIMES		INFO	RANGEL, ALEXANDRIA	OFFICER	2020	Oct	TH	1	0148	0148	0148	0	0
20043180		10/08/2020	0912	300 SE GRIMES BLVD, GRIMES		NODP	DAUTOVIC, MEVLID	OFFICER	2020	Oct	TH	9	0912	0912	0925	0	13
20043244		10/08/2020	1726	319 SE DESTINATION DR, GRIMES	:EST LL(-93.7691,41.6863)	CHECKS O	ARNOLD, BRYCE	OFFICER	2020	Oct	TH	17	1726	1726	1801	0	35
20043303		10/09/2020	0734	304 SE 6TH ST, GRIMES		CANCEL	KINNEY, PHILIP	OFFICER	2020	Oct	FR	7	0820	0841	0842	0	22
20043307		10/09/2020	0811	3000-B SE GLENSTONE DR, GRIMES		CHECKS O	BALLENGER, STEVEN	OFFICER	2020	Oct	FR	8	0811	0811	0848	0	37

Call ID	Case ID	Date	Time	Address	Loc Com	Disposition	Officer Name	How Receive	Year	Month	DOW	Hour	Time Disp	Time Arrive	Time Clear	TS Hour	TS Minute
20043371		10/09/2020	1643	900 SE 19TH ST, GRIMES		ADVISED	KRILE, CHALENA	OFFICER	2020	Oct	FR	16	1643	1643	1647	0	4
20043572		10/11/2020	0016	1772 NE GRIMES BLVD, GRIMES		TOUR	KAY, DONALD	OFFICER	2020	Oct	SU	0	0016	0016	0019	0	3
20043660		10/11/2020	1631	1314 SW 19TH ST, GRIMES		NODP	RINIKER, MICHAEL	OFFICER	2020	Oct	SU	16	1631	1631	1706	0	35
20043855		10/13/2020	0028	1780 NE GRIMES BLVD, GRIMES		CHECKS O	RANGEL, ALEXANDRIA	OFFICER	2020	Oct	TU	0	0028	0028	0032	0	4
20043878		10/13/2020	0610	1780 NE GRIMES BLVD, GRIMES		CHECKS O	RANGEL, ALEXANDRIA	OFFICER	2020	Oct	TU	6	0610	0610	0620	0	10
20043924		10/13/2020	1031	921 SW 19TH ST, GRIMES		CITATION	DAUTOVIC, MEVLID	OFFICER	2020	Oct	TU	10	1033	1103	1104	0	31
20044032		10/14/2020	0058	E 1ST ST / SE GATEWAY DR, GRIMES		CHECKS O	RANGEL, ALEXANDRIA	OFFICER	2020	Oct	WE	0	0058	0058	0134	0	36
20044047		10/14/2020	0548	1780 NE GRIMES BLVD, GRIMES		ADVISED	RANGEL, ALEXANDRIA	OFFICER	2020	Oct	WE	5	0000	0000	0557	0	0
20044056		10/14/2020	0743	921 SW 19TH ST, GRIMES		CITATION	DAUTOVIC, MEVLID	OFFICER	2020	Oct	WE	7	0752	0812	0812	0	20
20044168		10/14/2020	2317	1782 NE GRIMES BLVD, GRIMES		CHECKS O	RANGEL, ALEXANDRIA	OFFICER	2020	Oct	WE	23	2317	2317	2343	0	26
20044193		10/15/2020	0429	1774 NE GRIMES BLVD, GRIMES		CHECKS O	RANGEL, ALEXANDRIA	OFFICER	2020	Oct	TH	4	0521	0521	0521	0	0
20044203		10/15/2020	0712	298 SE GRIMES BLVD, GRIMES		NODP	DAUTOVIC, MEVLID	OFFICER	2020	Oct	TH	7	0712	0712	0733	0	21

Call ID	Case ID	Date	Time	Address	Loc Com	Disposition	Officer Name	How Receive	Year	Month	DOW	Hour	Time Disp	Time Arrive	Time Clear	TS Hour	TS Minute
20044204		10/15/2020	0724	612 SW BROOKSIDE DR, GRIMES	:EST LL(-93.8060,41.6954)	CANCEL	KINNEY, PHILIP	OFFICER	2020	Oct	TH	7	0736	0811	0811	0	35
20044297		10/15/2020	1843	1000 S JAMES ST, GRIMES		CHECKS O	KRILE, CHALENA	OFFICER	2020	Oct	TH	18	1843	1843	1902	0	19
20044349		10/16/2020	0159	1776 NE GRIMES BLVD, GRIMES		UTL	RANGEL, ALEXANDRIA	OFFICER	2020	Oct	FR	1	0159	0159	0251	0	52
20044516		10/17/2020	1123	298 SE GRIMES BLVD, GRIMES		NODP	DAUTOVIC, MEVLID	OFFICER	2020	Oct	SA	11	1123	1123	1133	0	10
20044856		10/19/2020	1731	779 N JAMES ST, GRIMES		CHECKS O	ARNOLD, BRYCE	OFFICER	2020	Oct	MO	17	1731	1731	1801	0	30
20044899		10/20/2020	0141	1495 SE GRIMES BLVD, GRIMES		ADVISED	LEWELLIN, LARRY	OFFICER	2020	Oct	TU	1	0141	0141	0157	0	16
20044923		10/20/2020	0727	304 SE 6TH ST, GRIMES		CANCEL	KINNEY, PHILIP	OFFICER	2020	Oct	TU	7	0727	0727	0857	1	30
20045014		10/20/2020	1955	200 SE GRIMES BLVD, GRIMES		TOUR	JOHNSON, BRIAN	OFFICER	2020	Oct	TU	19	2051	2051	2052	0	1
20045070		10/21/2020	0500	2353 SE GRIMES BLVD, GRIMES		UTL	RANGEL, ALEXANDRIA	OFFICER	2020	Oct	WE	5	0500	0500	0527	0	27
20045200		10/22/2020	0712	789 N JAMES ST, GRIMES		NODP	DAUTOVIC, MEVLID	OFFICER	2020	Oct	TH	7	0712	0712	0730	0	18
20045334		10/23/2020	0804	923 SW 19TH ST, GRIMES		ADVISED	DAUTOVIC, MEVLID	OFFICER	2020	Oct	FR	8	0809	0809	0819	0	10
20045455		10/24/2020	0242	1772 NE GRIMES BLVD, GRIMES		CHECKS O	RANGEL, ALEXANDRIA	OFFICER	2020	Oct	SA	2	0242	0242	0257	0	15

Call ID	Case ID	Date	Time	Address	Loc Com	Disposition	Officer Name	How Receive	Year	Month	DOW	Hour	Time Disp	Time Arrive	Time Clear	TS Hour	TS Minute
20045465		10/24/2020	0451	1776 NE GRIMES BLVD, GRIMES		CHECKS O	RANGEL, ALEXANDRIA	OFFICER	2020	Oct	SA	4	0528	0537	0537	0	9
20045484		10/24/2020	0947	789 N JAMES ST, GRIMES		NODP	DAUTOVIC, MEVLID	OFFICER	2020	Oct	SA	9	0947	0947	1001	0	14
20045577		10/24/2020	2329	300 SE GRIMES BLVD, GRIMES		ADVISED	RANGEL, ALEXANDRIA	OFFICER	2020	Oct	SA	23	0021	0021	0048	0	27
20045601		10/25/2020	0508	302 SE GRIMES BLVD, GRIMES		UTL	RANGEL, ALEXANDRIA	OFFICER	2020	Oct	SU	5	0508	0508	0524	0	16
20045639		10/25/2020	1526	321 SE DESTINATION DR, GRIMES		CHECKS O	ARNOLD, BRYCE	OFFICER	2020	Oct	SU	15	1526	1526	1542	0	16
20045645		10/25/2020	1616	406 SW BROOKSIDE DR, GRIMES		CHECKS O	CORY, IAN	OFFICER	2020	Oct	SU	16	1616	1616	1632	0	16
20045824		10/26/2020	1738	2359 SE GRIMES BLVD, GRIMES		CHECKS O	GOOD, ADAM	OFFICER	2020	Oct	MO	17	1738	1738	1752	0	14
20045887		10/27/2020	0748	304 SE 6TH ST, GRIMES		CANCEL	KINNEY, PHILIP	OFFICER	2020	Oct	TU	7	0748	0748	0835	0	47
20046090		10/28/2020	1516	1146 SW 19TH ST, GRIMES		NODP	NYSTROM, KIRSTEN	OFFICER	2020	Oct	WE	15	1516	1516	1527	0	11
20046197		10/29/2020	0818	300 SE GRIMES BLVD, GRIMES		NODP	DAUTOVIC, MEVLID	OFFICER	2020	Oct	TH	8	0818	0818	0849	0	31
20046230		10/29/2020	1307	2100 SE 19TH ST, GRIMES		NODP	DAUTOVIC, MEVLID	OFFICER	2020	Oct	TH	13	1307	1307	1334	0	27
20046259		10/29/2020	1808	406 SW BROOKSIDE DR, GRIMES		CHECKS O	CORY, IAN	OFFICER	2020	Oct	TH	18	1808	1808	1822	0	14

Call ID	Case ID	Date	Time	Address	Loc Com	Disposition	Officer Name	How Receive	Year	Month	DOW	Hour	Time Disp	Time Arrive	Time Clear	TS Hour	TS Minute
20046309		10/29/2020	2354	1146 SW 19TH ST, GRIMES		NODP	NYSTROM, KIRSTEN	OFFICER	2020	Oct	TH	23	2354	2354	0004	0	10
20046323		10/30/2020	0127	1762 NE GRIMES BLVD, GRIMES		NODP	NYSTROM, KIRSTEN	OFFICER	2020	Oct	FR	1	0127	0127	0131	0	4
20046427		10/30/2020	1705	406 SW BROOKSIDE DR, GRIMES		CHECKS O	CORY, IAN	OFFICER	2020	Oct	FR	17	1705	1705	1732	0	27
20046494		10/31/2020	0420	2352 SE GRIMES BLVD, GRIMES		CHECKS O	GOOD, ADAM	OFFICER	2020	Oct	SA	4	0420	0420	0423	0	3
RECKLESS		**Total = 8**															
20042281		10/02/2020	1651	128TH ST / S JAMES ST, GRIMES		BROA	DOVE, JEREMY	ADMIN	2020	Oct	FR	16	1659	1704	1704	0	5
20042442		10/03/2020	1704	SE 37TH ST / SE GRIMES BLVD, GRIMES		TOUR		ADMIN	2020	Oct	SA	17	0000	0000	1707	0	0
20042470		10/03/2020	2238	SE 19TH ST / SE GRIMES BLVD, GRIMES		CANCEL	CAPPELLE, JACOB	ANI/ALI	2020	Oct	SA	22	2242	2253	2255	0	13
20044068		10/14/2020	0936	E 1ST ST / NE DESTINATION DR, GRIMES		UTL	ARCURI, CHRISTIE	ADMIN	2020	Oct	WE	9	0937	0941	0950	0	13
20044156		10/14/2020	2107	2400-B E 1ST ST, GRIMES		CHECKS O	KRILE, CHALENA	ADMIN	2020	Oct	WE	21	2109	2109	2115	0	6
20044598		10/17/2020	1948	E 1ST ST / NE HARVEY ST, GRIMES		UTL	KRILE, CHALENA	ANI/ALI	2020	Oct	SA	19	1949	1953	1955	0	6
20045318		10/23/2020	0425	SE 37TH ST / SE GRIMES BLVD, GRIMES		WARNING	GOOD, ADAM	ADMIN	2020	Oct	FR	4	0425	0429	0444	0	19
20045384		10/23/2020	1557	SE 19TH ST / SE GRIMES BLVD, GRIMES		UTL	KRILE, CHALENA	ANI/ALI	2020	Oct	FR	15	1557	1557	1606	0	9

Call ID	Case ID	Date	Time	Address	Loc Com	Disposition	Officer Name	How Receive	Year	Month	DOW	Hour	Time Disp	Time Arrive	Time Clear	TS Hour	TS Minute
RESDFIRE		Total = 3															
20042502		10/04/2020	0724	1404 NE LITTLE BEAVER DR, GRIMES		ASSIST	KINNEY, PHILIP	ADMIN	2020	Oct	SU	7	0725	0729	0734	0	9
20044534		10/17/2020	1527	201 NE TANZANITE CT, GRIMES		CHECKS O	ARNOLD, BRYCE	ADMIN	2020	Oct	SA	15	1528	1531	1534	0	6
20045927		10/27/2020	1204	1217 NW NORTON ST, GRIMES		ASSIST	BALLENGER, STEVEN	ANI/ALI	2020	Oct	TU	12	1204	1213	1216	0	12
ROADS		Total = 2															
20044222		10/15/2020	0853	1000-B SE 37TH ST, GRIMES		ASSIST		OFFICER	2020	Oct	TH	8	0853	0853	0901	0	8
20044851		10/19/2020	1633	W 1ST ST / N JAMES ST, GRIMES		CHECKS O	RINIKER, MICHAEL	ADMIN	2020	Oct	MO	16	1635	1635	1635	0	0
ROBBERY		Total = 1															
20045497	20006407	10/24/2020	1215	601 SE DOVETAIL RD, GRIMES		CASE	BALLENGER, STEVEN	ANI/ALI	2020	Oct	SA	12	1215	1218	1322	1	7
RUNAWAY		Total = 1															
20045055	20006344	10/21/2020	0050	1208 NE 21ST ST, GRIMES		CASE	HADSALL, MATTHEW	ADMIN	2020	Oct	WE	0	0206	0206	0206	0	0
SEX		Total = 2															
20042129	20005918	10/01/2020	1651	605 SE GATEWAY DR, GRIMES		CASE	KRILE, CHALENA	ADMIN	2020	Oct	TH	16	1741	1750	1841	1	0
20045132	20006353	10/21/2020	1644	800 S JAMES ST, GRIMES	: @SPORTS COMPLEX - GRIM	CASE	KRILE, CHALENA	ADMIN	2020	Oct	WE	16	1645	1723	1738	0	53

Call ID	Case ID	Date	Time	Address	Loc Com	Disposition	Officer Name	How Receive	Year	Month	DOW	Hour	Time Disp	Time Arrive	Time Clear	TS Hour	TS Minute
SHOPLIFT		Total = 1															
20043248	20006084	10/08/2020	1807	2150 E 1ST ST, GRIMES	: @WALMART - GRIM	CASE	KRILE, CHALENA	ADMIN	2020	Oct	TH	18	1808	1808	1856	0	48
SIGNALS		Total = 1															
20042811		10/06/2020	1023	SE 37TH ST / SE GRIMES BLVD, GRIMES		CHECKS O	DAUTOVIC, MEVLID	OFFICER	2020	Oct	TU	10	1024	1030	1050	0	26
SILENT		Total = 3															
20042177		10/01/2020	2334	2929 NE BRENTWOOD CIR, GRIMES		ASSIST	HADSALL, MATTHEW	ADMIN	2020	Oct	TH	23	2335	2339	2344	0	9
20043715		10/12/2020	0242	925 SE GATEWAY DR, GRIMES		CANCEL	REES, HALEIGH	ADMIN	2020	Oct	MO	2	0244	0244	0248	0	4
20045188		10/22/2020	0335	1601 SE GATEWAY DR, GRIMES		EMPLOYEE	RANGEL, ALEXANDRIA	ADMIN	2020	Oct	TH	3	0335	0339	0350	0	15
STALLED		Total = 15															
20042086		10/01/2020	0955	1000-B SE GRIMES BLVD, GRIMES		ADVISED	DAUTOVIC, MEVLID	OFFICER	2020	Oct	TH	9	0955	0955	0958	0	3
20042843		10/06/2020	1406	NW 114TH ST / NW TOWNER DR, GRIMES		GREENTAG	DAUTOVIC, MEVLID	OFFICER	2020	Oct	TU	14	1406	1406	1411	0	5
20042889		10/06/2020	1812	SE 37TH ST / SE GRIMES BLVD, GRIMES		ASSIST	KRILE, CHALENA	ANI/ALI	2020	Oct	TU	18	1813	1834	1906	0	53
20042892		10/06/2020	1837	SE 37TH ST / SE GRIMES BLVD, GRIMES		ASSIST	CORY, IAN	OFFICER	2020	Oct	TU	18	1837	1837	1839	0	2
20043804		10/12/2020	1642	2600-B SE GRIMES BLVD, GRIMES		ASSIST	RINIKER, MICHAEL	OFFICER	2020	Oct	MO	16	1642	1642	1654	0	12
20043900		10/13/2020	0900	SE 37TH ST / SE GRIMES BLVD, GRIMES		UTL	KINNEY, PHILIP	ADMIN	2020	Oct	TU	9	0901	0914	0940	0	39

Call ID	Case ID	Date	Time	Address	Loc Com	Disposition	Officer Name	How Receive	Year	Month	DOW	Hour	Time Disp	Time Arrive	Time Clear	TS Hour	TS Minute
20044960		10/20/2020	1313	SE 37TH ST / SE GRIMES BLVD, GRIMES		ASSIST	HAKE, MICHAEL	ADMIN	2020	Oct	TU	13	1317	1327	1328	0	11
20045273		10/22/2020	1821	1500-B SE GRIMES BLVD, GRIMES		ASSIST	MUMM, JARRED	OFFICER	2020	Oct	TH	18	1821	1821	1826	0	5
20045290		10/22/2020	2115	E 1ST ST / HWY 141 NB OFF RMP, GRIMES		ASSIST	RINIKER, MICHAEL	OFFICER	2020	Oct	TH	21	2115	2115	2144	0	29
20045457		10/24/2020	0301	W 1ST ST / SW BROOKSIDE DR, GRIMES		ASSIST	GOOD, ADAM	OFFICER	2020	Oct	SA	3	0301	0301	0303	0	2
20045807		10/26/2020	1600	1600-B SE GATEWAY DR, GRIMES		CHECKS O	ARNOLD, BRYCE	OFFICER	2020	Oct	MO	16	1600	1600	1604	0	4
20045973		10/27/2020	1741	1100-B SE GRIMES BLVD, GRIMES		ASSIST	ARNOLD, BRYCE	OFFICER	2020	Oct	TU	17	1741	1741	1743	0	2
20046115		10/28/2020	1752	E 1ST ST / SE GATEWAY DR, GRIMES		ASSIST	ARNOLD, BRYCE	ANI/ALI	2020	Oct	WE	17	1756	1759	1829	0	33
20046433		10/30/2020	1754	SE GLENSTONE DR / SE STONE RIDGE DR, GRIMES		ASSIST	CORY, IAN	ADMIN	2020	Oct	FR	17	1754	1755	1755	0	1
20046478		10/31/2020	0046	SE 11TH ST / SE DESTINATION DR, GRIMES		ASSIST	GOOD, ADAM	OFFICER	2020	Oct	SA	0	0046	0046	0055	0	9
STILL		**Total = 1**															
20042888		10/06/2020	1811	512 SE TRAIL RIDGE RD, GRIMES		ASSIST	CORY, IAN	ADMIN	2020	Oct	TU	18	1811	1811	1824	0	13
SUSP		**Total = 37**															
20042108		10/01/2020	1435	504 SW HICKORY CT, GRIMES		ADVISED	KRILE, CHALENA	ADMIN	2020	Oct	TH	14	1437	1444	1506	0	29
20042583		10/04/2020	2338	3450 SE GATEWAY DR, GRIMES		CHECKS O	HADSALL, MATTHEW	OFFICER	2020	Oct	SU	23	2338	2338	2340	0	2

Call ID	Case ID	Date	Time	Address	Loc Com	Disposition	Officer Name	How Receive	Year	Month	DOW	Hour	Time Disp	Time Arrive	Time Clear	TS Hour	TS Minute
20042600	20005986	10/05/2020	0149	3160 SE GRIMES BLVD, GRIMES	: @HICKLIN POWER SPORTS (SUITE 700 A&B) - GRIM	ADVISED	RANGEL, ALEXANDRIA	OFFICER	2020	Oct	MO	1	0203	0224	0242	0	39
20042804		10/06/2020	0942	2351 E 1ST ST, GRIMES	: @KWIK STAR - GRIM	ADVISED	DAUTOVIC, MEVLID	ADMIN	2020	Oct	TU	9	0943	0949	1003	0	20
20042813		10/06/2020	1039	2055 E 1ST ST, GRIMES	: @ALDI - GRIM	ASSIST	CALLAHAN, KENNETH	ADMIN	2020	Oct	TU	10	1040	1116	1117	0	37
20043034		10/07/2020	1326	1900 SE 37TH ST, GRIMES	: @QT - GRIM	GOA	BALLENGER, STEVEN	ADMIN	2020	Oct	WE	13	1327	1335	1338	0	11
20043124		10/07/2020	2357	3711 SE CAPITOL CIR, GRIMES	: @CONTINENTAL CONSTRUCTION CO - GRIM	INFO	WARD, GREGORY	OFFICER	2020	Oct	WE	23	2357	2357	0002	0	5
20043301		10/09/2020	0622	2351 E 1ST ST, GRIMES	: @KWIK STAR - GRIM	CHECKS O	RANGEL, ALEXANDRIA	OFFICER	2020	Oct	FR	6	0622	0622	0628	0	6
20043430	20006107	10/10/2020	0001	2600-B SE ENTERPRISE DR, GRIMES		CASE	HADSALL, MATTHEW	OFFICER	2020	Oct	SA	0	0001	0001	0208	2	7
20043486		10/10/2020	1044	SE KEYSTONE DR / SE WEATHERSTONE ST, GRIMES		UTL	BALLENGER, STEVEN	ADMIN	2020	Oct	SA	10	1046	1056	1103	0	17
20043580	20006120	10/11/2020	0114	2904 SE VICTORY DR, GRIMES		ADVISED	KAY, DONALD	ANI/ALI	2020	Oct	SU	1	1139	1139	1429	2	50
20043686		10/11/2020	2139	808 SE 14TH ST, GRIMES		ADVISED	ARNOLD, BRYCE	ADMIN	2020	Oct	SU	21	2140	2145	2153	0	13

Call ID	Case ID	Date	Time	Address	Loc Com	Disposition	Officer Name	How Receive	Year	Month	DOW	Hour	Time Disp	Time Arrive	Time Clear	TS Hour	TS Minute
20043784		10/12/2020	1422	SE GLENSTONE DR / SE STONE RIDGE ST, GRIMES		CHECKS O	HAKE, MICHAEL	ADMIN	2020	Oct	MO	14	1423	1430	1434	0	11
20043873		10/13/2020	0406	935 SE SILKWOOD LN, GRIMES	: @RESERVE AT DESTINATION PLACE - GRIM	CHECKS O	HADSALL, MATTHEW	OFFICER	2020	Oct	TU	4	0406	0406	0412	0	6
20043877		10/13/2020	0610	200-B NE DESTINATION DR, GRIMES		CHECKS O	HADSALL, MATTHEW	OFFICER	2020	Oct	TU	6	0610	0610	0614	0	4
20044028		10/14/2020	0010	1200-B SE 37TH ST, GRIMES		CHECKS O	HADSALL, MATTHEW	OFFICER	2020	Oct	WE	0	0010	0010	0011	0	1
20044098		10/14/2020	1241	301 SE 11TH ST, GRIMES		ADVISED	DAUTOVIC, MEVLID	ADMIN	2020	Oct	WE	12	1241	1246	1300	0	19
20044160		10/14/2020	2126	2600-B SE ENTERPRISE DR, GRIMES		ADVISED	KRILE, CHALENA	OFFICER	2020	Oct	WE	21	2126	2126	2157	0	31
20044214		10/15/2020	0810	411 W 1ST ST, GRIMES		UTL	DAUTOVIC, MEVLID	ANI/ALI	2020	Oct	TH	8	0811	0811	0825	0	14
20044244		10/15/2020	1249	2500 SE 37TH ST, GRIMES	: @CUTTYS CAMPGROUND - GRIM	CHECKS O	DAUTOVIC, MEVLID	ADMIN	2020	Oct	TH	12	1250	1258	1304	0	14
20044617	20006262	10/17/2020	2301	SE 37TH ST / SE GRIMES BLVD, GRIMES		CASE	GOOD, ADAM	OFFICER	2020	Oct	SA	23	2301	2301	2302	0	1
20044630		10/18/2020	0058	2170 E 1ST ST, GRIMES	: @BURGER KING - GRIM	CHECKS O	HADSALL, MATTHEW	OFFICER	2020	Oct	SU	0	0058	0058	0101	0	3

Call ID	Case ID	Date	Time	Address	Loc Com	Disposition	Officer Name	How Receive	Year	Month	DOW	Hour	Time Disp	Time Arrive	Time Clear	TS Hour	TS Minute
20044741		10/18/2020	2344	3160 SE GRIMES BLVD, GRIMES	: @HICKLIN POWER SPORTS (SUITE 700 A&B) - GRIM	ADVISED	HADSALL, MATTHEW	ADMIN	2020	Oct	SU	23	2345	2352	2354	0	9
20044888		10/20/2020	0010	300 NE DESTINATION DR, GRIMES	: @MENARDS - GRIM	CHECKS O	LEWELLIN, LARRY	OFFICER	2020	Oct	TU	0	0010	0010	0018	0	8
20045044		10/20/2020	2326	1905 SE 37TH ST, GRIMES	: @BP AMOCO - GRIM	ADVISED	HADSALL, MATTHEW	OFFICER	2020	Oct	TU	23	2326	2326	2332	0	6
20045338		10/23/2020	0812	700 NW 11TH ST, GRIMES		CANCELEV		ADMIN	2020	Oct	FR	8	0000	0000	0814	0	0
20045360		10/23/2020	1119	800-B SE SHAWVER DR, GRIMES		ADVISED	BALLENGER, STEVEN	ADMIN	2020	Oct	FR	11	1122	1126	1134	0	12
20045435		10/23/2020	2355	875 SE GATEWAY DR, GRIMES		CANCEL	LEWELLIN, LARRY	ANI/ALI	2020	Oct	FR	23	2356	2359	0006	0	10
20045448		10/24/2020	0108	3155 SE MIEHE DR, GRIMES	: @HEARTLAND HEATING & COOLING (SUITE 1) - GRIM	CANCEL	RANGEL, ALEXANDRIA	OFFICER	2020	Oct	SA	1	0108	0108	0112	0	4
20045450		10/24/2020	0117	2000-B SE 37TH ST, GRIMES		CANCEL	RANGEL, ALEXANDRIA	OFFICER	2020	Oct	SA	1	0117	0117	0121	0	4
20045473		10/24/2020	0650	SE 11TH ST / SE DESTINATION DR, GRIMES		ADVISED	BALLENGER, STEVEN	OFFICER	2020	Oct	SA	6	0650	0650	0659	0	9
20045586		10/25/2020	0110	300-B SE 2ND ST, GRIMES		CHECKS O	RANGEL, ALEXANDRIA	OFFICER	2020	Oct	SU	1	0110	0110	0114	0	4

Call ID	Case ID	Date	Time	Address	Loc Com	Disposition	Officer Name	How Receive	Year	Month	DOW	Hour	Time Disp	Time Arrive	Time Clear	TS Hour	TS Minute
20045593	20006416	10/25/2020	0201	3160 SE GRIMES BLVD, GRIMES	: @HICKLIN POWER SPORTS (SUITE 700 A&B) - GRIM	CASE	GOOD, ADAM	OFFICER	2020	Oct	SU	2	0201	0201	0317	1	16
20045680		10/25/2020	2138	376 SW KENNYBROOK DR, GRIMES		ADVISED	CORY, IAN	ADMIN	2020	Oct	SU	21	2147	2158	2205	0	18
20046016		10/28/2020	0258	300 NE DESTINATION DR, GRIMES	: @MENARDS - GRIM	CHECKS O	LEWELLIN, LARRY	OFFICER	2020	Oct	WE	2	0258	0258	0300	0	2
20046176		10/29/2020	0336	3000-B SE MIEHE DR, GRIMES		CHECKS O	SNOOK, MICHAEL	OFFICER	2020	Oct	TH	3	0336	0336	0340	0	4
20046500		10/31/2020	0605	317 SE JACOB ST, GRIMES	: @BROOKSIDE APARTMENTS - GRIM	UTL	GOOD, ADAM	ADMIN	2020	Oct	SA	6	0606	0608	0608	0	2
THEFT		**Total = 14**															
20042526	20005975	10/04/2020	1222	2308 SE 7TH LN, GRIMES		CASE	HAKE, MICHAEL	ADMIN	2020	Oct	SU	12	1223	1227	1416	1	53
20042620	20005990	10/05/2020	0750	700 SE CROSSINGS LN, GRIMES		CASE	KINNEY, PHILIP	ADMIN	2020	Oct	MO	7	0751	0811	0827	0	36
20042657	20005999	10/05/2020	1151	3600 SE GATEWAY DR, GRIMES	: @LOCKBOX STORAGE - GRIM	CASE	DAUTOVIC, MEVLID	ADMIN	2020	Oct	MO	11	1200	1208	1312	1	12
20042713		10/05/2020	1736	2500 SE 37TH ST, GRIMES	: @CUTTYS CAMPGROUND - GRIM	ADVISED	KRILE, CHALENA	ADMIN	2020	Oct	MO	17	1815	1827	1845	0	30

Call ID	Case ID	Date	Time	Address	Loc Com	Disposition	Officer Name	How Receive	Year	Month	DOW	Hour	Time Disp	Time Arrive	Time Clear	TS Hour	TS Minute
20042877	20006030	10/06/2020	1708	310 SE GATEWAY DR, GRIMES	: @OAK CROSSING APARTMENTS - GRIM	CASE	KRILE, CHALENA	ADMIN	2020	Oct	TU	17	1709	1713	1724	0	15
20043666	20006128	10/11/2020	1802	2150 E 1ST ST, GRIMES	: @WALMART - GRIM	CASE	RINIKER, MICHAEL	ADMIN	2020	Oct	SU	18	1808	1826	1912	1	4
20044277	20006221	10/15/2020	1547	1120 SE 11TH ST, GRIMES	: @MEADOWLARK PLACE APARTMENTS - GRIM	CASE	KRILE, CHALENA	ADMIN	2020	Oct	TH	15	1548	1555	1613	0	25
20044306	20006223	10/15/2020	1937	2150 E 1ST ST, GRIMES	: @WALMART - GRIM	CASE	ARNOLD, BRYCE	ADMIN	2020	Oct	TH	19	1938	1942	1957	0	19
20044455	20006243	10/16/2020	2011	2150 E 1ST ST, GRIMES	: @WALMART - GRIM	CASE	KRILE, CHALENA	ADMIN	2020	Oct	FR	20	2012	2017	2035	0	23
20044602	20006257	10/17/2020	2016	2150 E 1ST ST, GRIMES	: @WALMART - GRIM	CASE	KRILE, CHALENA	ADMIN	2020	Oct	SA	20	2105	2105	2105	0	0
20044687		10/18/2020	1125	205 NW 8TH ST, GRIMES	: @NORTHWAY APARTMENTS - GRIM	ASSIST	HAKE, MICHAEL	ADMIN	2020	Oct	SU	11	1126	1130	1143	0	17
20045288	20006375	10/22/2020	2101	2150 E 1ST ST, GRIMES	: @WALMART - GRIM	CASE	RINIKER, MICHAEL	ADMIN	2020	Oct	TH	21	2115	2144	2156	0	41
20045394	20006390	10/23/2020	1637	2150 E 1ST ST, GRIMES	: @WALMART - GRIM	CASE	ARNOLD, BRYCE	ADMIN	2020	Oct	FR	16	1638	1643	1654	0	16

Call ID	Case ID	Date	Time	Address	Loc Com	Disposition	Officer Name	How Receive	Year	Month	DOW	Hour	Time Disp	Time Arrive	Time Clear	TS Hour	TS Minute
20045995	20006496	10/27/2020	2015	2150 E 1ST ST, GRIMES	: @WALMART - GRIM	CASE	ARCURI, CHRISTIE	ADMIN	2020	Oct	TU	20	2017	2021	2115	0	58
THREAT		**Total = 2**															
20042068	20005905	10/01/2020	0804	240 S JAMES ST, GRIMES	: @GRIMES PARK APARTMENTS - GRIM,1	ADVISED	BALLENGER, STEVEN	ADMIN	2020	Oct	TH	8	0804	0808	0840	0	36
20045615		10/25/2020	0931	1600 NW NORTON CT, GRIMES		ADVISED	BALLENGER, STEVEN	ADMIN	2020	Oct	SU	9	0932	0952	1013	0	41
TRAFFIC		**Total = 149**															
20042102		10/01/2020	1349	500-B SW HICKORY GLEN, GRIMES		WARNING	BALLENGER, STEVEN	OFFICER	2020	Oct	TH	13	1349	1349	1358	0	9
20042328		10/02/2020	2105	SE 37TH ST / S JAMES ST, GRIMES		WARNING	DOVE, JEREMY	OFFICER	2020	Oct	FR	21	2105	2105	2112	0	7
20042505		10/04/2020	0812	1000 SE 11TH ST, GRIMES	: @MEADOWLARK PLACE APARTMENTS - GRIM	CITATION	HAKE, MICHAEL	OFFICER	2020	Oct	SU	8	0812	0812	0829	0	17
20042520		10/04/2020	1046	605 SW 37TH ST, GRIMES	: @EAGLE SIGN CO - GRIM	NODP	HAKE, MICHAEL	OFFICER	2020	Oct	SU	10	1046	1046	1107	0	21
20042766		10/06/2020	0158	1ST ST TO HWY 141 SB RMP / SE GRIMES BLVD, GRIMES		ADVISED	RANGEL, ALEXANDRIA	OFFICER	2020	Oct	TU	1	0158	0158	0207	0	9
20042769		10/06/2020	0252	800-B NE GRIMES BLVD, GRIMES		ADVISED	RANGEL, ALEXANDRIA	OFFICER	2020	Oct	TU	2	0252	0252	0301	0	9
20042776		10/06/2020	0534	1100-B E 1ST ST, GRIMES		WARNING	HADSALL, MATTHEW	OFFICER	2020	Oct	TU	5	0534	0534	0546	0	12

Call ID	Case ID	Date	Time	Address	Loc Com	Disposition	Officer Name	How Receive	Year	Month	DOW	Hour	Time Disp	Time Arrive	Time Clear	TS Hour	TS Minute
20042786		10/06/2020	0729	206 E 1ST ST, GRIMES	: @CASEYS - GRIM	ADVISED	DAUTOVIC, MEVLID	OFFICER	2020	Oct	TU	7	0729	0729	0737	0	8
20042798		10/06/2020	0850	SE 19TH ST / SE LITTLE BEAVER DR, GRIMES		ADVISED	KINNEY, PHILIP	OFFICER	2020	Oct	TU	8	0850	0850	0902	0	12
20042871		10/06/2020	1615	SE 37TH ST / SE GRIMES BLVD, GRIMES		ADVISED	KRILE, CHALENA	OFFICER	2020	Oct	TU	16	1615	1615	1635	0	20
20042873		10/06/2020	1645	1900-B SE 28TH ST, GRIMES		CHECKS O	KRILE, CHALENA	OFFICER	2020	Oct	TU	16	1645	1645	1653	0	8
20042894		10/06/2020	1853	SE 19TH ST / SE GRIMES BLVD, GRIMES		ADVISED	CORY, IAN	OFFICER	2020	Oct	TU	18	1853	1853	1858	0	5
20042899		10/06/2020	1904	E 1ST ST / SE GATEWAY DR, GRIMES		WARNING	CORY, IAN	OFFICER	2020	Oct	TU	19	1904	1904	1912	0	8
20042915		10/06/2020	2251	E 1ST ST / SE DESTINATION DR, GRIMES		WARNING	SCHUTTE, ROBERT	OFFICER	2020	Oct	TU	22	2251	2251	2302	0	11
20042975		10/07/2020	0739	W 1ST ST / SW MAPLEWOOD DR, GRIMES		WARNING	BALLENGER, STEVEN	OFFICER	2020	Oct	WE	7	0739	0739	0745	0	6
20042982		10/07/2020	0813	2100-B SE 11TH ST, GRIMES		CITATION	BALLENGER, STEVEN	OFFICER	2020	Oct	WE	8	0813	0813	0829	0	16
20042999		10/07/2020	0935	SE 19TH ST / SE LITTLE BEAVER DR, GRIMES		WARNING	BALLENGER, STEVEN	OFFICER	2020	Oct	WE	9	0935	0935	0953	0	18
20043032		10/07/2020	1258	1400-B SE GRIMES BLVD, GRIMES		CHECKS O	DAUTOVIC, MEVLID	OFFICER	2020	Oct	WE	12	1258	1258	1302	0	4
20043049		10/07/2020	1516	800-B E 1ST ST, GRIMES		ASSIST	HOMEISTER, WESLEY	OFFICER	2020	Oct	WE	15	1516	1516	1525	0	9

Call ID	Case ID	Date	Time	Address	Loc Com	Disposition	Officer Name	How Receive	Year	Month	DOW	Hour	Time Disp	Time Arrive	Time Clear	TS Hour	TS Minute
20043069		10/07/2020	1629	SE 37TH ST / SE STONEGATE DR, GRIMES		WARNING	KRILE, CHALENA	OFFICER	2020	Oct	WE	16	1629	1629	1642	0	13
20043081		10/07/2020	1801	2300-B NE PARK DR, GRIMES		WARNING	KRILE, CHALENA	OFFICER	2020	Oct	WE	18	1801	1801	1807	0	6
20043122		10/07/2020	2346	2200-B SE 37TH ST, GRIMES		WARNING	WARD, GREGORY	OFFICER	2020	Oct	WE	23	2346	2346	2354	0	8
20043155		10/08/2020	0532	SE 11TH ST / SE GRIMES BLVD, GRIMES		ADVISED	RANGEL, ALEXANDRIA	OFFICER	2020	Oct	TH	5	0532	0532	0553	0	21
20043166		10/08/2020	0800	600-B SW 19TH ST, GRIMES		WARNING	DAUTOVIC, MEVLID	OFFICER	2020	Oct	TH	8	0800	0800	0807	0	7
20043264		10/08/2020	2133	NE BEAVERBROOKE BLVD / NE GRIMES BLVD, GRIMES		ADVISED	KRILE, CHALENA	OFFICER	2020	Oct	TH	21	2133	2133	2137	0	4
20043390		10/09/2020	1922	SW 37TH ST / SW BROOKSIDE DR, GRIMES		CITATION	KRILE, CHALENA	OFFICER	2020	Oct	FR	19	1922	1922	1933	0	11
20043394		10/09/2020	1946	3500-B SW BROOKSIDE DR, GRIMES		CITATION	KRILE, CHALENA	OFFICER	2020	Oct	FR	19	1946	1946	1958	0	12
20043398		10/09/2020	1955	800-B W 1ST ST, GRIMES		ADVISED	ARNOLD, BRYCE	OFFICER	2020	Oct	FR	19	1955	1955	1957	0	2
20043399		10/09/2020	2002	800-B SE DESTINATION DR, GRIMES		ADVISED	ARNOLD, BRYCE	OFFICER	2020	Oct	FR	20	2002	2002	2007	0	5
20043420		10/09/2020	2254	1700-B NE GRIMES BLVD, GRIMES		WARNING	HADSALL, MATTHEW	OFFICER	2020	Oct	FR	22	2254	2254	2304	0	10
20043495		10/10/2020	1237	1300 SE 37TH ST, GRIMES		WARNING	KINNEY, PHILIP	OFFICER	2020	Oct	SA	12	1237	1237	1246	0	9

Call ID	Case ID	Date	Time	Address	Loc Com	Disposition	Officer Name	How Receive	Year	Month	DOW	Hour	Time Disp	Time Arrive	Time Clear	TS Hour	TS Minute
20043532		10/10/2020	1859	101 SE GATEWAY DR, GRIMES	: @MCDONALDS - GRIM	ADVISED	ARNOLD, BRYCE	OFFICER	2020	Oct	SA	18	1859	1859	1907	0	8
20043534		10/10/2020	1911	206 E 1ST ST, GRIMES	: @CASEYS - GRIM	WARNING	ARNOLD, BRYCE	OFFICER	2020	Oct	SA	19	1911	1911	1921	0	10
20043536		10/10/2020	1932	3800-B S JAMES ST, GRIMES		ADVISED	ARNOLD, BRYCE	OFFICER	2020	Oct	SA	19	1932	1932	1938	0	6
20043577		10/11/2020	0058	SE 11TH ST / SE GATEWAY DR, GRIMES		CHECKS O	KAY, DONALD	OFFICER	2020	Oct	SU	0	0058	0058	0059	0	1
20043655		10/11/2020	1603	2800-B S JAMES ST, GRIMES		CITATION	RINIKER, MICHAEL	OFFICER	2020	Oct	SU	16	1603	1603	1611	0	8
20043797		10/12/2020	1559	2800-B SE GRIMES BLVD, GRIMES		CITATION	ARCURI, CHRISTIE	OFFICER	2020	Oct	MO	15	1559	1559	1610	0	11
20043807		10/12/2020	1658	100-B SW 19TH ST, GRIMES		WARNING	RINIKER, MICHAEL	OFFICER	2020	Oct	MO	16	1658	1658	1707	0	9
20043813		10/12/2020	1755	600-B SE GATEWAY DR, GRIMES		WARNING	ARCURI, CHRISTIE	OFFICER	2020	Oct	MO	17	1755	1755	1804	0	9
20043851		10/12/2020	2315	E 1ST ST / SE EWING ST, GRIMES		WARNING	HADSALL, MATTHEW	OFFICER	2020	Oct	MO	23	2315	2315	2323	0	8
20043871		10/13/2020	0311	3000-B SE GRIMES BLVD, GRIMES		CITATION	HADSALL, MATTHEW	OFFICER	2020	Oct	TU	3	0311	0311	0352	0	41
20043876		10/13/2020	0505	300-B SE 19TH ST, GRIMES		WARNING	HADSALL, MATTHEW	OFFICER	2020	Oct	TU	5	0505	0505	0517	0	12
20043881		10/13/2020	0641	2200-B E 1ST ST, GRIMES		NODP	HADSALL, MATTHEW	OFFICER	2020	Oct	TU	6	0641	0641	0646	0	5

Call ID	Case ID	Date	Time	Address	Loc Com	Disposition	Officer Name	How Receive	Year	Month	DOW	Hour	Time Disp	Time Arrive	Time Clear	TS Hour	TS Minute
20043926		10/13/2020	1033	600-B SW 19TH ST, GRIMES		WARNING	DAUTOVIC, MEVLID	OFFICER	2020	Oct	TU	10	1033	1033	1042	0	9
20043970		10/13/2020	1557	SE 37TH ST / SE GRIMES BLVD, GRIMES		ADVISED	MAY, JOHN	OFFICER	2020	Oct	TU	15	1557	1557	1601	0	4
20043979		10/13/2020	1720	1900 SE 37TH ST, GRIMES	: @QT - GRIM	WARNING	KRILE, CHALENA	OFFICER	2020	Oct	TU	17	1720	1720	1729	0	9
20043990		10/13/2020	1822	1450 NE BEAVERBROOKE BLVD, GRIMES	: @KWIK STAR - GRIM	ASSIST	KRILE, CHALENA	OFFICER	2020	Oct	TU	18	1822	1822	1831	0	9
20043993		10/13/2020	1847	1800-B SE GRIMES BLVD, GRIMES		CITATION	KRILE, CHALENA	OFFICER	2020	Oct	TU	18	1847	1847	1912	0	25
20043996		10/13/2020	1913	400-B SE DESTINATION DR, GRIMES		WARNING	MAY, JOHN	OFFICER	2020	Oct	TU	19	1913	1913	1928	0	15
20044008		10/13/2020	2031	SE 11TH ST / SE GATEWAY DR, GRIMES		CITATION	KRILE, CHALENA	OFFICER	2020	Oct	TU	20	2031	2031	2103	0	32
20044009		10/13/2020	2054	951 SE GATEWAY DR, GRIMES	: @CASEYS - GRIM	ADVISED	MAY, JOHN	OFFICER	2020	Oct	TU	20	2054	2054	2056	0	2
20044035		10/14/2020	0140	1200-B NE MAIN ST, GRIMES		ADVISED	HADSALL, MATTHEW	OFFICER	2020	Oct	WE	1	0140	0140	0148	0	8
20044049		10/14/2020	0557	SE 11TH ST / SE GRIMES BLVD, GRIMES		ADVISED	RANGEL, ALEXANDRIA	OFFICER	2020	Oct	WE	5	0557	0557	0604	0	7
20044058		10/14/2020	0752	SW 19TH ST / SW COUNTY LINE RD, GRIMES		CITATION	DAUTOVIC, MEVLID	OFFICER	2020	Oct	WE	7	0752	0752	0800	0	8
20044118		10/14/2020	1532	251 SE GATEWAY CIR, GRIMES	: @AMERICINN - GRIM	CHECKS O	KRILE, CHALENA	OFFICER	2020	Oct	WE	15	1532	1532	1539	0	7

Call ID	Case ID	Date	Time	Address	Loc Com	Disposition	Officer Name	How Receive	Year	Month	DOW	Hour	Time Disp	Time Arrive	Time Clear	TS Hour	TS Minute
20044119	20006202	10/14/2020	1544	2800-B SE GRIMES BLVD, GRIMES		ARREST	KRILE, CHALENA	OFFICER	2020	Oct	WE	15	1544	1544	1643	0	59
20044138		10/14/2020	1744	100-B SE 19TH ST, GRIMES		ADVISED	RINIKER, MICHAEL	OFFICER	2020	Oct	WE	17	1744	1744	1753	0	9
20044173		10/15/2020	0010	SE 3RD ST / SE GATEWAY DR, GRIMES		CHECKS O	GOOD, ADAM	OFFICER	2020	Oct	TH	0	0010	0010	0016	0	6
20044196		10/15/2020	0444	1ST ST TO HWY 141 SB RMP / SE GRIMES BLVD, GRIMES		NODP	RANGEL, ALEXANDRIA	OFFICER	2020	Oct	TH	4	0444	0444	0449	0	5
20044197		10/15/2020	0457	E 1ST ST / HWY 141 NB OFF RMP, GRIMES		NODP	RANGEL, ALEXANDRIA	OFFICER	2020	Oct	TH	4	0457	0457	0506	0	9
20044199		10/15/2020	0512	1450 NE BEAVERBROOKE BLVD, GRIMES	: @KWIK STAR - GRIM	NODP	RANGEL, ALEXANDRIA	OFFICER	2020	Oct	TH	5	0512	0512	0520	0	8
20044205		10/15/2020	0736	NW 3RD CT / SW BROOKSIDE DR, GRIMES		ADVISED	KINNEY, PHILIP	OFFICER	2020	Oct	TH	7	0736	0736	0737	0	1
20044209		10/15/2020	0800	600-B SW 19TH ST, GRIMES		WARNING	DAUTOVIC, MEVLID	OFFICER	2020	Oct	TH	8	0800	0800	0806	0	6
20044248		10/15/2020	1349	SE 19TH ST / SE LITTLE BEAVER DR, GRIMES		WARNING	KINNEY, PHILIP	OFFICER	2020	Oct	TH	13	1349	1349	1357	0	8
20044289		10/15/2020	1755	1900-B SE 37TH ST, GRIMES		ADVISED	ARNOLD, BRYCE	OFFICER	2020	Oct	TH	17	1755	1755	1800	0	5
20044290		10/15/2020	1806	2800-B SE GRIMES BLVD, GRIMES		ADVISED	ARNOLD, BRYCE	OFFICER	2020	Oct	TH	18	1806	1806	1812	0	6
20044299		10/15/2020	1852	3300-B SE GRIMES BLVD, GRIMES		ADVISED	ARNOLD, BRYCE	OFFICER	2020	Oct	TH	18	1852	1852	1908	0	16

Call ID	Case ID	Date	Time	Address	Loc Com	Disposition	Officer Name	How Receive	Year	Month	DOW	Hour	Time Disp	Time Arrive	Time Clear	TS Hour	TS Minute
20044310		10/15/2020	2019	1200-B SE GRIMES BLVD, GRIMES		ADVISED	ARNOLD, BRYCE	OFFICER	2020	Oct	TH	20	2019	2019	2025	0	6
20044313		10/15/2020	2026	SW 37TH ST / SW BROOKSIDE DR, GRIMES		ADVISED	KRILE, CHALENA	OFFICER	2020	Oct	TH	20	2026	2026	2027	0	1
20044317		10/15/2020	2107	241 SE DESTINATION DR, GRIMES		ADVISED	ARNOLD, BRYCE	OFFICER	2020	Oct	TH	21	2107	2107	2111	0	4
20044324		10/15/2020	2144	SE 37TH ST / SE GATEWAY DR, GRIMES		WARNING	KRILE, CHALENA	OFFICER	2020	Oct	TH	21	2144	2144	2154	0	10
20044330		10/15/2020	2229	801 E 1ST ST, GRIMES	: @KUM & GO - GRIM	NODP	RANGEL, ALEXANDRIA	OFFICER	2020	Oct	TH	22	2229	2229	2234	0	5
20044419		10/16/2020	1552	800-B N JAMES ST, GRIMES		ADVISED	ARNOLD, BRYCE	OFFICER	2020	Oct	FR	15	1552	1552	1557	0	5
20044430		10/16/2020	1639	2800-B SE GRIMES BLVD, GRIMES		ADVISED	KRILE, CHALENA	OFFICER	2020	Oct	FR	16	1639	1639	1649	0	10
20044433		10/16/2020	1656	E 1ST ST / NE DESTINATION DR, GRIMES		ADVISED	ARNOLD, BRYCE	OFFICER	2020	Oct	FR	16	1656	1656	1700	0	4
20044436		10/16/2020	1714	1900 SE GRIMES BLVD, GRIMES		CHECKS O	KRILE, CHALENA	OFFICER	2020	Oct	FR	17	1714	1714	1723	0	9
20044464		10/16/2020	2145	NW 7TH ST / N JAMES ST, GRIMES		CHECKS O	ARNOLD, BRYCE	OFFICER	2020	Oct	FR	21	2145	2145	2149	0	4
20044477		10/17/2020	0015	SE 19TH ST / SE PRINCETON DR, GRIMES		WARNING	GOOD, ADAM	OFFICER	2020	Oct	SA	0	0015	0015	0022	0	7
20044482	20006246	10/17/2020	0127	1905 SE 37TH ST, GRIMES	: @BP AMOCO - GRIM	ASSIST	RANGEL, ALEXANDRIA	OFFICER	2020	Oct	SA	1	0127	0127	0306	1	39

Call ID	Case ID	Date	Time	Address	Loc Com	Disposition	Officer Name	How Receive	Year	Month	DOW	Hour	Time Disp	Time Arrive	Time Clear	TS Hour	TS Minute
20044557		10/17/2020	1652	SE GATEWAY CIR / SE GATEWAY DR, GRIMES		ADVISED	KRILE, CHALENA	OFFICER	2020	Oct	SA	16	1652	1652	1657	0	5
20044571		10/17/2020	1755	SE 19TH ST / SE MIEHE DR, GRIMES		ADVISED	KRILE, CHALENA	OFFICER	2020	Oct	SA	17	1755	1755	1759	0	4
20044572		10/17/2020	1803	2500 SE 37TH ST, GRIMES	: @CUTTYS CAMPGROUND - GRIM	WARNING	KRILE, CHALENA	OFFICER	2020	Oct	SA	18	1803	1803	1812	0	9
20044581		10/17/2020	1827	E 1ST ST / HWY 141 NB ON RMP, GRIMES		ADVISED	ARNOLD, BRYCE	OFFICER	2020	Oct	SA	18	1827	1827	1834	0	7
20044582		10/17/2020	1827	SE 25TH ST / SE GATEWAY DR, GRIMES		WARNING	KRILE, CHALENA	OFFICER	2020	Oct	SA	18	1827	1827	1836	0	9
20044601	20006256	10/17/2020	2000	951 SE GATEWAY DR, GRIMES	: @CASEYS - GRIM	ASSIST	KRILE, CHALENA	OFFICER	2020	Oct	SA	20	2000	2000	2154	1	54
20044624		10/18/2020	0003	1200-B SE GATEWAY DR, GRIMES		WARNING	HADSALL, MATTHEW	OFFICER	2020	Oct	SU	0	0003	0003	0013	0	10
20044633		10/18/2020	0111	700-B E 1ST ST, GRIMES		CHECKS O	HADSALL, MATTHEW	OFFICER	2020	Oct	SU	1	0111	0111	0116	0	5
20044641		10/18/2020	0256	2600-B SE GRIMES BLVD, GRIMES		ADVISED	HADSALL, MATTHEW	OFFICER	2020	Oct	SU	2	0256	0256	0307	0	11
20044646		10/18/2020	0316	951 SE GATEWAY DR, GRIMES	: @CASEYS - GRIM	WARNING	GOOD, ADAM	OFFICER	2020	Oct	SU	3	0316	0316	0324	0	8
20044653		10/18/2020	0433	3800-B SE GRIMES BLVD, GRIMES		CHECKS O	GOOD, ADAM	OFFICER	2020	Oct	SU	4	0433	0433	0435	0	2

Call ID	Case ID	Date	Time	Address	Loc Com	Disposition	Officer Name	How Receive	Year	Month	DOW	Hour	Time Disp	Time Arrive	Time Clear	TS Hour	TS Minute
20044666		10/18/2020	0755	400-B SW 37TH ST, GRIMES		WARNING	HAKE, MICHAEL	OFFICER	2020	Oct	SU	7	0755	0755	0802	0	7
20044690		10/18/2020	1324	3700-B S JAMES ST, GRIMES		WARNING	HAKE, MICHAEL	OFFICER	2020	Oct	SU	13	1324	1324	1331	0	7
20044792		10/19/2020	1032	SE 3RD ST / SE GATEWAY CIR, GRIMES		ADVISED	KINNEY, PHILIP	OFFICER	2020	Oct	MO	10	1032	1032	1037	0	5
20044864	20006310	10/19/2020	1857	1000-B SW 19TH ST, GRIMES		CASE	RINIKER, MICHAEL	OFFICER	2020	Oct	MO	18	1946	1946	1950	0	4
20044931		10/20/2020	0857	3600-B SE GRIMES BLVD, GRIMES	:NB	WARNING	HAKE, MICHAEL	OFFICER	2020	Oct	TU	8	0857	0857	0910	0	13
20044953		10/20/2020	1229	500-B SW 37TH ST, GRIMES		WARNING	HAKE, MICHAEL	OFFICER	2020	Oct	TU	12	1229	1229	1237	0	8
20044956		10/20/2020	1234	NE BEAVERBROOKE BLVD / N JAMES ST, GRIMES		WARNING	KINNEY, PHILIP	OFFICER	2020	Oct	TU	12	1234	1234	1251	0	17
20045015		10/20/2020	2012	1800-B SE GRIMES BLVD, GRIMES		WARNING	JOHNSON, BRIAN	OFFICER	2020	Oct	TU	20	2013	2013	2024	0	11
20045023		10/20/2020	2040	2800-B SE GRIMES BLVD, GRIMES		WARNING	JOHNSON, BRIAN	OFFICER	2020	Oct	TU	20	2040	2040	2049	0	9
20045026		10/20/2020	2054	SE 19TH ST / SE GRIMES BLVD, GRIMES		WARNING	JOHNSON, BRIAN	OFFICER	2020	Oct	TU	20	2054	2054	2104	0	10
20045066		10/21/2020	0347	2000-B SE 37TH ST, GRIMES		WARNING	HADSALL, MATTHEW	OFFICER	2020	Oct	WE	3	0347	0347	0356	0	9
20045080		10/21/2020	0819	700-B SW 19TH ST, GRIMES		ADVISED	DAUTOVIC, MEVLID	OFFICER	2020	Oct	WE	8	0819	0819	0824	0	5

Call ID	Case ID	Date	Time	Address	Loc Com	Disposition	Officer Name	How Receive	Year	Month	DOW	Hour	Time Disp	Time Arrive	Time Clear	TS Hour	TS Minute
20045096		10/21/2020	1034	NW 3RD ST / NW CALISTA CT, GRIMES		ADVISED	DAUTOVIC, MEVLID	OFFICER	2020	Oct	WE	10	1034	1034	1043	0	9
20045105		10/21/2020	1147	SE 28TH ST / SE GRIMES BLVD, GRIMES		CITATION	DAUTOVIC, MEVLID	OFFICER	2020	Oct	WE	11	1147	1147	1157	0	10
20045289		10/22/2020	2110	SE 3RD ST / S JAMES ST, GRIMES		CITATION	MUMM, JARRED	OFFICER	2020	Oct	TH	21	2110	2110	2126	0	16
20045335		10/23/2020	0809	700 SW 19TH ST, GRIMES		CITATION	DAUTOVIC, MEVLID	OFFICER	2020	Oct	FR	8	0809	0809	0820	0	11
20045380		10/23/2020	1509	500-B SE TRAIL RIDGE RD, GRIMES		WARNING	KRILE, CHALENA	OFFICER	2020	Oct	FR	15	1509	1509	1517	0	8
20045405		10/23/2020	1806	2555 W 1ST ST, GRIMES	: @DALLAS CENTER GRIMES HIGH SCHOOL - GRIM	ASSIST	ARNOLD, BRYCE	OFFICER	2020	Oct	FR	18	1806	1806	1810	0	4
20045421		10/23/2020	2120	2100-B E 1ST ST, GRIMES		WARNING	KRILE, CHALENA	OFFICER	2020	Oct	FR	21	2120	2120	2133	0	13
20045430		10/23/2020	2255	1880 SE PRINCETON DR, GRIMES	: @KUM & GO - GRIM	ASSIST	GOOD, ADAM	OFFICER	2020	Oct	FR	22	2255	2255	2313	0	18
20045468		10/24/2020	0528	E 1ST ST / HWY 141 SB OFF RMP, GRIMES		ADVISED	RANGEL, ALEXANDRIA	OFFICER	2020	Oct	SA	5	0528	0528	0536	0	8
20045472		10/24/2020	0640	141 NE GRIMES BLVD, GRIMES		WARNING	RANGEL, ALEXANDRIA	OFFICER	2020	Oct	SA	6	0640	0640	0650	0	10
20045485		10/24/2020	1006	2500 SE 37TH ST, GRIMES	: @CUTTYS CAMPGROUND - GRIM	CITATION	DAUTOVIC, MEVLID	OFFICER	2020	Oct	SA	10	1006	1006	1020	0	14

Call ID	Case ID	Date	Time	Address	Loc Com	Disposition	Officer Name	How Receive	Year	Month	DOW	Hour	Time Disp	Time Arrive	Time Clear	TS Hour	TS Minute
20045533		10/24/2020	1627	1700-B SE 19TH ST, GRIMES		CITATION	KRILE, CHALENA	OFFICER	2020	Oct	SA	16	1627	1627	1644	0	17
20045543		10/24/2020	1727	204 W 1ST ST, GRIMES	: @TRUE VALUE - GRIM	WARNING	KRILE, CHALENA	OFFICER	2020	Oct	SA	17	1727	1727	1734	0	7
20045545	20006412	10/24/2020	1745	1900 SE 37TH ST, GRIMES	: @QT - GRIM	CITATION	KRILE, CHALENA	OFFICER	2020	Oct	SA	17	1745	1745	1831	0	46
20045553		10/24/2020	1918	200-B SE 19TH ST, GRIMES		ADVISED	KRILE, CHALENA	OFFICER	2020	Oct	SA	19	1918	1918	1927	0	9
20045565		10/24/2020	2117	SE 19TH ST / SE MIEHE DR, GRIMES		CHECKS O	ARNOLD, BRYCE	OFFICER	2020	Oct	SA	21	2117	2117	2121	0	4
20045581		10/25/2020	0021	SE 11TH ST / SE GRIMES BLVD, GRIMES		ADVISED	RANGEL, ALEXANDRIA	OFFICER	2020	Oct	SU	0	0021	0021	0048	0	27
20045583		10/25/2020	0040	SE 37TH ST / SE DESTINATION DR, GRIMES		CHECKS O	GOOD, ADAM	OFFICER	2020	Oct	SU	0	0040	0040	0044	0	4
20045590		10/25/2020	0151	SE 37TH ST / SE GRIMES BLVD, GRIMES		ADVISED	RANGEL, ALEXANDRIA	OFFICER	2020	Oct	SU	1	0151	0151	0204	0	13
20045621		10/25/2020	1037	NE 8TH ST / NE HARVEY ST, GRIMES		ADVISED	BALLENGER, STEVEN	OFFICER	2020	Oct	SU	10	1037	1037	1039	0	2
20045662		10/25/2020	1818	SE 11TH ST / SE GRIMES BLVD, GRIMES		ADVISED	CORY, IAN	OFFICER	2020	Oct	SU	18	1818	1818	1821	0	3
20045708		10/26/2020	0459	1880 SE PRINCETON DR, GRIMES	: @KUM & GO - GRIM	ADVISED	GOOD, ADAM	OFFICER	2020	Oct	MO	4	0459	0459	0502	0	3
20045724		10/26/2020	0741	1600-B E 1ST ST, GRIMES		WARNING	BALLENGER, STEVEN	OFFICER	2020	Oct	MO	7	0741	0741	0750	0	9

Call ID	Case ID	Date	Time	Address	Loc Com	Disposition	Officer Name	How Receive	Year	Month	DOW	Hour	Time Disp	Time Arrive	Time Clear	TS Hour	TS Minute
20045736		10/26/2020	0817	NW 8TH ST / N JAMES ST, GRIMES		ADVISED	KINNEY, PHILIP	OFFICER	2020	Oct	MO	8	0817	0817	0825	0	8
20045797		10/26/2020	1516	400-B SE GATEWAY CIR, GRIMES		WARNING	GOOD, ADAM	OFFICER	2020	Oct	MO	15	1516	1516	1525	0	9
20045800		10/26/2020	1532	1700-B E 1ST ST, GRIMES		WARNING	GOOD, ADAM	OFFICER	2020	Oct	MO	15	1532	1532	1546	0	14
20045801		10/26/2020	1540	SE 11TH ST / SE DESTINATION DR, GRIMES		ADVISED	ARNOLD, BRYCE	OFFICER	2020	Oct	MO	15	1540	1540	1554	0	14
20045825	20006466	10/26/2020	1759	800 S JAMES ST, GRIMES	: @SPORTS COMPLEX - GRIM	CITATION	ARNOLD, BRYCE	OFFICER	2020	Oct	MO	17	1759	1759	1840	0	41
20045872		10/27/2020	0342	SE 19TH ST / SE GATEWAY DR, GRIMES		CHECKS O	GOOD, ADAM	OFFICER	2020	Oct	TU	3	0342	0342	0350	0	8
20045974		10/27/2020	1745	250 SE GATEWAY DR, GRIMES	: @MEDICAP PHARMACY - GRIM	ADVISED	ARNOLD, BRYCE	OFFICER	2020	Oct	TU	17	1745	1745	1750	0	5
20045982		10/27/2020	1839	900-B N JAMES ST, GRIMES		EXCHANGE	ARCURI, CHRISTIE	OFFICER	2020	Oct	TU	18	1839	1839	1856	0	17
20045996		10/27/2020	2032	900-B SE 10TH LN, GRIMES		ADVISED	ARNOLD, BRYCE	OFFICER	2020	Oct	TU	20	2032	2032	2037	0	5
20046025		10/28/2020	0510	1500-B SE GRIMES BLVD, GRIMES		WARNING	LEWELLIN, LARRY	OFFICER	2020	Oct	WE	5	0510	0510	0515	0	5
20046048		10/28/2020	1001	300-B SW 37TH ST, GRIMES		WARNING	HAKE, MICHAEL	OFFICER	2020	Oct	WE	10	1001	1001	1010	0	9

Call ID	Case ID	Date	Time	Address	Loc Com	Disposition	Officer Name	How Receive	Year	Month	DOW	Hour	Time Disp	Time Arrive	Time Clear	TS Hour	TS Minute
20046059		10/28/2020	1105	SE 11TH ST / SE GRIMES BLVD, GRIMES		CITATION	HAKE, MICHAEL	OFFICER	2020	Oct	WE	11	1105	1105	1116	0	11
20046105	20006521	10/28/2020	1629	W 1ST ST / NW CALISTA CT, GRIMES		CASE	NYSTROM, KIRSTEN	OFFICER	2020	Oct	WE	16	1629	1629	1730	1	1
20046125		10/28/2020	1925	1200-B SE LITTLE BEAVER DR, GRIMES		WARNING	NYSTROM, KIRSTEN	OFFICER	2020	Oct	WE	19	1925	1925	1937	0	12
20046194		10/29/2020	0747	100-B S JAMES ST, GRIMES		ADVISED	KINNEY, PHILIP	OFFICER	2020	Oct	TH	7	0747	0747	0749	0	2
20046330		10/30/2020	0248	E 1ST ST / S JAMES ST, GRIMES		WARNING	NYSTROM, KIRSTEN	OFFICER	2020	Oct	FR	2	0248	0248	0303	0	15
20046332		10/30/2020	0304	E 1ST ST / N JAMES ST, GRIMES		ADVISED	NYSTROM, KIRSTEN	OFFICER	2020	Oct	FR	3	0304	0304	0308	0	4
20046384		10/30/2020	1149	2100-B S JAMES ST, GRIMES		WARNING	DAUTOVIC, MEVLID	OFFICER	2020	Oct	FR	11	1149	1149	1155	0	6
20046385		10/30/2020	1157	NW 142ND ST / NW 70TH AVE, GRIMES		WARNING	ARCURI, CHRISTIE	OFFICER	2020	Oct	FR	11	1157	1157	1206	0	9
20046438	20006574	10/30/2020	1823	SE 28TH ST / SE GATEWAY DR, GRIMES		ASSIST	DAUTOVIC, MEVLID	OFFICER	2020	Oct	FR	18	1823	1823	1907	0	44
20046473		10/31/2020	0003	200-B E 1ST ST, GRIMES		ADVISED	WARD, GREGORY	OFFICER	2020	Oct	SA	0	0003	0003	0022	0	19
20046475		10/31/2020	0017	SE 11TH ST / SE DESTINATION DR, GRIMES		ADVISED	WARD, GREGORY	OFFICER	2020	Oct	SA	0	0017	0017	0044	0	27
20046553		10/31/2020	1705	2300 N JAMES ST, GRIMES		ADVISED	ARNOLD, BRYCE	OFFICER	2020	Oct	SA	17	1705	1705	1707	0	2

Call ID	Case ID	Date	Time	Address	Loc Com	Disposition	Officer Name	How Receive	Year	Month	DOW	Hour	Time Disp	Time Arrive	Time Clear	TS Hour	TS Minute
20046577		10/31/2020	2031	SE 6TH ST / SE EWING ST, GRIMES		NODP	ARNOLD, BRYCE	OFFICER	2020	Oct	SA	20	2031	2031	2107	0	36
TRANSPOR		**Total = 1**															
20043279	20006091	10/09/2020	0019	200 S JAMES ST, GRIMES	: @JGFD 37	CASE	WARD, GREGORY	ADMIN	2020	Oct	FR	0	0025	0056	0142	1	17
UNK		**Total = 1**															
20046138		10/28/2020	2215	317 SE JACOB ST, GRIMES	: @BROOKSIDE APARTMENTS - GRIM	ASSIST	ARNOLD, BRYCE	ADMIN	2020	Oct	WE	22	2215	2220	2231	0	16
VANDAL		**Total = 3**															
20043299		10/09/2020	0529	1400 NE POLK DR, GRIMES		ADVISED	RANGEL, ALEXANDRIA	ANI/ALI	2020	Oct	FR	5	0530	0538	0554	0	24
20044612		10/17/2020	2152	613 NE 7TH ST, GRIMES		CHECKS O	HADSALL, MATTHEW	ADMIN	2020	Oct	SA	21	2226	2243	2310	0	44
20046575	20006586	10/31/2020	2011	3013 SE GLENSTONE DR, GRIMES		CASE	BACH, BRYAN	ADMIN	2020	Oct	SA	20	2011	2017	2049	0	38
WANTED		**Total = 4**															
20042906	20006036	10/06/2020	2100	1109 NW GABUS CIR, GRIMES		CASE	KRILE, CHALENA	OFFICER	2020	Oct	TU	21	2100	2100	2207	1	7
20044989		10/20/2020	1622	1300 SW 4TH ST, GRIMES		UTL	JOHNSON, BRIAN	OFFICER	2020	Oct	TU	16	1623	1625	1633	0	10
20045229		10/22/2020	1213	701 SE SILKWOOD LN, GRIMES		UTL	ROMP, KEITH	ADMIN	2020	Oct	TH	12	1214	1230	1247	0	33
20045283		10/22/2020	2019	601 SE DOVETAIL RD, GRIMES		CHECKS O	MUMM, JARRED	OFFICER	2020	Oct	TH	20	2019	2019	2042	0	23

Call ID	Case ID	Date	Time	Address	Loc Com	Disposition	Officer Name	How Receive	Year	Month	DOW	Hour	Time Disp	Time Arrive	Time Clear	TS Hour	TS Minute
WATCH		Total = 36															
20042178		10/02/2020	0002	1000 SE 11TH ST, GRIMES	: @MEADOWLARK PLACE APARTMENTS - GRIM	CHECKS O	HADSALL, MATTHEW	OFFICER	2020	Oct	FR	0	0002	0002	0012	0	10
20042495		10/04/2020	0346	1250 SE 11TH ST, GRIMES	: @MEADOWLARK PLACE APARTMENTS - GRIM	CHECKS O	ZEBEDEE, MATTHEW	OFFICER	2020	Oct	SU	3	0346	0346	0355	0	9
20042597		10/05/2020	0128	1000 SE 11TH ST, GRIMES	: @MEADOWLARK PLACE APARTMENTS - GRIM	CHECKS O	HADSALL, MATTHEW	OFFICER	2020	Oct	MO	1	0128	0128	0140	0	12
20042751		10/06/2020	0000	1000 SE 11TH ST, GRIMES	: @MEADOWLARK PLACE APARTMENTS - GRIM	CHECKS O	RANGEL, ALEXANDRIA	OFFICER	2020	Oct	TU	0	0000	0000	0008	0	8
20043292		10/09/2020	0301	1000 SE 11TH ST, GRIMES	: @MEADOWLARK PLACE APARTMENTS - GRIM	CHECKS O	RANGEL, ALEXANDRIA	OFFICER	2020	Oct	FR	3	0301	0301	0309	0	8
20043570		10/11/2020	0007	1405 SE 28TH ST, GRIMES		CHECKS O	HADSALL, MATTHEW	OFFICER	2020	Oct	SU	0	0007	0007	0009	0	2
20043860		10/13/2020	0115	1000 SE 11TH ST, GRIMES	: @MEADOWLARK PLACE APARTMENTS - GRIM	CHECKS O	HADSALL, MATTHEW	OFFICER	2020	Oct	TU	1	0115	0115	0126	0	11

Call ID	Case ID	Date	Time	Address	Loc Com	Disposition	Officer Name	How Receive	Year	Month	DOW	Hour	Time Disp	Time Arrive	Time Clear	TS Hour	TS Minute
20044029		10/14/2020	0013	2300 SE 37TH ST, GRIMES	: @MC ADVANTAGES - GRIM	CHECKS O	HADSALL, MATTHEW	OFFICER	2020	Oct	WE	0	0013	0013	0031	0	18
20044240		10/15/2020	1153	402 SE 6TH ST, GRIMES		CHECKS O	DAUTOVIC, MEVLID	OFFICER	2020	Oct	TH	11	1153	1153	1155	0	2
20044468		10/16/2020	2255	1400 BLK NE CEDARWOOD DR, GRIMES		CANCELEV	RANGEL, ALEXANDRIA	OFFICER	2020	Oct	FR	22	0000	0000	2307	0	0
20044487		10/17/2020	0336	2600 SE ENTERPRISE DR, GRIMES		CHECKS O	RANGEL, ALEXANDRIA	OFFICER	2020	Oct	SA	3	0336	0336	0404	0	28
20044533		10/17/2020	1512	1400 BLK NE CEDARWOOD DR, GRIMES		CHECKS O	KRILE, CHALENA	OFFICER	2020	Oct	SA	15	1512	1512	1515	0	3
20044740		10/18/2020	2335	2600 SE ENTERPRISE DR, GRIMES		CHECKS O	HADSALL, MATTHEW	OFFICER	2020	Oct	SU	23	2335	2335	2341	0	6
20044911		10/20/2020	0325	2600 SE ENTERPRISE DR, GRIMES		CHECKS O	HADSALL, MATTHEW	OFFICER	2020	Oct	TU	3	0325	0325	0348	0	23
20045043		10/20/2020	2314	1400 BLK NE CEDARWOOD DR, GRIMES		CHECKS O	RANGEL, ALEXANDRIA	OFFICER	2020	Oct	TU	23	2314	2314	2336	0	22
20045078		10/21/2020	0757	402 SE 6TH ST, GRIMES		CHECKS O	DAUTOVIC, MEVLID	OFFICER	2020	Oct	WE	7	0757	0757	0806	0	9
20045168		10/21/2020	2301	1106 SW BROOKSIDE DR, GRIMES		CHECKS O	RANGEL, ALEXANDRIA	OFFICER	2020	Oct	WE	23	2301	2301	2329	0	28
20045179		10/22/2020	0034	1400 BLK NE CEDARWOOD DR, GRIMES		CHECKS O	RANGEL, ALEXANDRIA	OFFICER	2020	Oct	TH	0	0034	0034	0059	0	25
20045186		10/22/2020	0312	2600 SE ENTERPRISE DR, GRIMES		CHECKS O	RANGEL, ALEXANDRIA	OFFICER	2020	Oct	TH	3	0312	0312	0329	0	17

Call ID	Case ID	Date	Time	Address	Loc Com	Disposition	Officer Name	How Receive	Year	Month	DOW	Hour	Time Disp	Time Arrive	Time Clear	TS Hour	TS Minute
20045297		10/22/2020	2338	2600 SE ENTERPRISE DR, GRIMES		CHECKS O	RANGEL, ALEXANDRIA	OFFICER	2020	Oct	TH	23	2338	2338	0003	0	25
20045302		10/23/2020	0108	1400 BLK NE CEDARWOOD DR, GRIMES		CHECKS O	RANGEL, ALEXANDRIA	OFFICER	2020	Oct	FR	1	0108	0108	0119	0	11
20045309		10/23/2020	0219	800 S JAMES ST, GRIMES	: @GRIMES SPORTS COMPLEX - GRIM	CHECKS O	GOOD, ADAM	OFFICER	2020	Oct	FR	2	0219	0219	0221	0	2
20045311		10/23/2020	0254	1000 SE 11TH ST, GRIMES	: @MEADOWLARK PLACE APARTMENTS - GRIM	CHECKS O	RANGEL, ALEXANDRIA	OFFICER	2020	Oct	FR	2	0254	0254	0302	0	8
20045352		10/23/2020	1023	402 SE 6TH ST, GRIMES		CHECKS O	DAUTOVIC, MEVLID	OFFICER	2020	Oct	FR	10	1023	1023	1027	0	4
20045379		10/23/2020	1508	2981 W 1ST ST, GRIMES		CHECKS O	ARNOLD, BRYCE	OFFICER	2020	Oct	FR	15	1508	1508	1535	0	27
20045418		10/23/2020	2056	1415 NE POLK DR, GRIMES		CHECKS O	KRILE, CHALENA	OFFICER	2020	Oct	FR	20	2056	2056	2058	0	2
20045426		10/23/2020	2213	901 SW TIMBERVIEW DR, GRIMES		CHECKS O	KRILE, CHALENA	ADMIN	2020	Oct	FR	22	1338	1338	1525	1	47
20045440		10/24/2020	0034	1704 NE GATEWAY CT, GRIMES		CHECKS O	RANGEL, ALEXANDRIA	OFFICER	2020	Oct	SA	0	0034	0034	0049	0	15
20045458		10/24/2020	0315	1400 CEDARWOOD RD, GRIMES		CHECKS O	RANGEL, ALEXANDRIA	OFFICER	2020	Oct	SA	3	0315	0315	0336	0	21
20045766		10/26/2020	1051	3305 SE GLENSTONE DR, GRIMES		ADVISED		ADMIN	2020	Oct	MO	10	1127	1127	1255	1	28

Call ID	Case ID	Date	Time	Address	Loc Com	Disposition	Officer Name	How Receive	Year	Month	DOW	Hour	Time Disp	Time Arrive	Time Clear	TS Hour	TS Minute
20046209		10/29/2020	1013	402 SE 6TH ST, GRIMES		CHECKS O	DAUTOVIC, MEVLID	OFFICER	2020	Oct	TH	10	1013	1013	1018	0	5
20046419		10/30/2020	1613	402 SE 6TH ST, GRIMES		CHECKS O	DAUTOVIC, MEVLID	OFFICER	2020	Oct	FR	16	1613	1613	1619	0	6
20046468		10/30/2020	2310	2555 W 1ST ST, GRIMES	: @DALLAS CENTER GRIMES HIGH SCHOOL - GRIM	CHECKS O	WARD, GREGORY	OFFICER	2020	Oct	FR	23	2310	2310	2314	0	4
20046469		10/30/2020	2342	935 SE SILKWOOD LN, GRIMES	: @RESERVE AT DESTINATION PLACE - GRIM	CHECKS O	WARD, GREGORY	OFFICER	2020	Oct	FR	23	2342	2342	2349	0	7
20046480		10/31/2020	0122	900-B NE GATEWAY DR, GRIMES		CHECKS O	WARD, GREGORY	OFFICER	2020	Oct	SA	1	0122	0122	0124	0	2
20046504		10/31/2020	0809	2555 W 1ST ST, GRIMES	: @DALLAS CENTER GRIMES HIGH SCHOOL - GRIM	ASSIST	MCATEE, JESSE	ADMIN	2020	Oct	SA	8	0811	0826	0827	0	16
WELFARE		**Total = 12**															
20042064		10/01/2020	0635	NW 114TH ST / NW TOWNER DR, GRIMES		ADVISED	DAUTOVIC, MEVLID	ADMIN	2020	Oct	TH	6	0640	0649	0651	0	11
20042267		10/02/2020	1535	709 SE 5TH ST, GRIMES		CHECKS O	BALLENGER, STEVEN	ADMIN	2020	Oct	FR	15	1536	1546	1849	3	13
20042450		10/03/2020	1826	204 SE MAIN ST, GRIMES	: @STEVIE CS - GRIM	UTL	BACH, BRYAN	ADMIN	2020	Oct	SA	18	1827	1832	1835	0	8
20043225	20006081	10/08/2020	1506	661 SE EWING ST, GRIMES		ASSIST	ARNOLD, BRYCE	ADMIN	2020	Oct	TH	15	1507	1510	1912	4	5

Call ID	Case ID	Date	Time	Address	Loc Com	Disposition	Officer Name	How Receive	Year	Month	DOW	Hour	Time Disp	Time Arrive	Time Clear	TS Hour	TS Minute
20043720		10/12/2020	0518	801 E 1ST ST, GRIMES	: @KUM & GO - GRIM	CHECKS O	WARD, GREGORY	ADMIN	2020	Oct	MO	5	0518	0519	0533	0	15
20044090		10/14/2020	1206	904 NE HARVEY ST, GRIMES		ADVISED	ROMP, KEITH	ADMIN	2020	Oct	WE	12	1209	1213	1233	0	24
20044327		10/15/2020	2209	617 NE 7TH ST, GRIMES		ADVISED	KRILE, CHALENA	ADMIN	2020	Oct	TH	22	2210	2219	2221	0	11
20045180		10/22/2020	0205	SE 19TH ST / S JAMES ST, GRIMES		UTL	RANGEL, ALEXANDRIA	ADMIN	2020	Oct	TH	2	0206	0211	0221	0	15
20045487		10/24/2020	1029	605 SE GATEWAY DR, GRIMES		ADVISED	BALLENGER, STEVEN	ADMIN	2020	Oct	SA	10	1033	1042	1047	0	14
20045905		10/27/2020	0937	3000 SE COVENANT DR, GRIMES		ADVISED	CALLAHAN, KENNETH	ADMIN	2020	Oct	TU	9	0947	0957	1021	0	34
20046107	20006523	10/28/2020	1635	3000 SE COVENANT DR, GRIMES		ASSIST	LONG, BRENT	ADMIN	2020	Oct	WE	16	1639	1659	1724	0	45
20046110		10/28/2020	1709	2004 NE HERITAGE DR, GRIMES		ADVISED	JOHNSON, BRIAN	ADMIN	2020	Oct	WE	17	1722	1729	1735	0	13

Grimes - Citation Counts

Total Citations & Written Warnings: 156

All Citation Charges - Grimes				
Year	Month	Charge	Citation	Written Warning
2020	*Oct*	DARK WINDOW OR WINDSHIELD Dark Windows or Windshield		2
		DEPOSITING OR THROWING LITTER -		1
		DNU - INFORMATION AND AID/LEAVING SCENE OF ACCIDENT (SMMS)		1
		DRIVING ON WRONG SIDE OF TWO WAY HIGHWAY -		1
		DRIVING WHILE LICENSE DENIED,SUSP,CANCELLED OR REVOKED	3	1
		DRIVING WHILE LICENSE UNDER SUSPENSION DUS -- 321A.32(1)	2	
		FAIL TO DISPLAY REGISTRATION PLATE		1
		FAIL TO MAINTAIN CONTROL	3	
		FAIL TO MAINTAIN SAFETY BELTS - FAIL TO MAINTAIN SAFETY BELT		1
		FAIL TO OBEY STOP OR YIELD SIGN FAIL TO OBEY STOP OR YIELD S	1	1
		FAIL TO OBEY STOP SIGN AND YIELD RIGHT OF WAY Fail to Yield		2
		FAIL TO OBEY TRAFFIC CONTROL DEVICE	2	6
		FAIL TO YIELD TO EMERGENCY VEHICLE -		1
		FAIL TO YIELD UPON LEFT TURN	1	
		FAILURE TO MAINTAIN CONTROL	2	
		FAILURE TO MAINTAIN REGISTRATION PLATE		1
		FAILURE TO POSSESS VALID LICENSE WHILE OPER. MOTOR VEH.		2
		FAILURE TO PROVIDE PROOF OF FINANCIAL LIABILITY No Accident	9	7
		FAILURE TO STOP IN ASSURED CLEAR DISTANCE	4	
		FAILURE TO USE HEADLAMPS WHEN REQUIRED		3
		FOLLOWING TOO CLOSE -	1	1
		IMPROPER BRAKE LIGHT		9
		IMPROPER REAR LAMP -		5
		IMPROPER REGISTRATION PLATE LAMP -		1
		IMPROPER REGISTRATION PLATE LAMP		1
		IMPROPER USE OF AUXILIARY DRIVING LIGHTS -		1
		IMPROPER USE OF LANES	1	

2020	*Oct*	IMPROPER USE OF REGISTRATION IMPROPER USE OF REGISTRATION		1
		INSUFFICIENT NUMBER OF HEADLAMPS -		1
		INSUFFICIENT NUMBER OF HEADLIGHTS		3
		LEAVE SCENE OF ACCIDENT - FAIL TO PROVIDE AID OR INFORMATION	1	
		NEW TITLE/REGISTRATION TRANSFER VIOLATION		1
		NO VALID DRIVERS LICENSE	7	
		OPERATION OF MOTOR VEHICLE WITH EXPIRED LICENSE		1
		OPERATION WITHOUT REGISTRATION CARD OR PLATE	2	8
		PARKING VIOLATION -	1	
		PROHIBITED USE OF LIGHT RESTRICTING DEVICES		1
		REGISTRATION VIOLATION		2
		SPEEDING 55 OR UND ZONE (1 THRU 5 OVER) Speeding 55 or Under	2	4
		SPEEDING 55 OR UND ZONE (11 THRU 15 OVER) Speeding 55 or Und	1	10
		SPEEDING 55 OR UND ZONE (16 THRU 20 OVER)		4
		SPEEDING 55 OR UND ZONE (6 THRU 10 OVER) Speeding 55 or Unde	7	8
		SPEEDING 55 OR UNDER ZONE (16 THRU 20)		1
		SPEEDING 55 OR UNDER ZONE (20 MPH OVER)	1	
		SPEEDING OVER 55 ZONE (1 THRU 5 OVER)		1
		SPILLING LOADS ON HIGHWAY	1	
		STOPPING, STANDING OR PARKING WHERE PROHIBITED Stopping, Sta	3	
		STOPPING/PARKING ON SIDEWALK	1	
		UNSAFE BACKING ON HIGHWAY	1	
		VEHICLES FAIL TO RESPOND TO STEADY RED LIGHT		1
		VIOLATION OF CONDITIONS OF RESTRICTED LICENSE	1	
		VIOLATION OF INSTRUCTION PERMIT LIMITATION		1
		WINDSHIELD AND WINDOW REQUIREMENTS Violation of Windshield a		1
		Month Total	***58***	***98***
	Year Total		***58***	***98***

Grimes - Citations Detail List

Report Month: October 2020

Total: 156 Citations

Citation ID	Case ID/ Race/ Cit Type	Arrest ID/ Ethnicity/ Category 2	Date/ Sex/ Statute	Time/ Age/ Charge	DOW/ Residence	Address	Officer		
2157			**10/08/2020**	**0756**	**TH**	**703 SE 5TH ST**			
	W	N	M	21	N				
	N/A		321.358	STOPPING, STANDING OR PARKING WHERE PROHIBITED Stopping, Sta			BALLENGER, STEVEN		
2159			**10/08/2020**	**0835**	**TH**	**1000-B NE 19TH ST**			
	W	N	F	43	R				
	N/A		461A.38	PARKING VIOLATION -			BALLENGER, STEVEN		
2160			**10/08/2020**	**0849**	**TH**	**1002 NE 21ST ST**			
	W	N	F	22	N				
	N/A		321.358	STOPPING, STANDING OR PARKING WHERE PROHIBITED Stopping, Sta			BALLENGER, STEVEN		
2161			**10/08/2020**	**0919**	**TH**	**505 NW 13TH ST**			
	W	N	F	32	N				
	N/A		321.358(1)	STOPPING/PARKING ON SIDEWALK			BALLENGER, STEVEN		
2162			**10/23/2020**	**0749**	**FR**	**700-B SE 6TH ST**			
	W	H	M	38	R				
	N/A		321.358	STOPPING, STANDING OR PARKING WHERE PROHIBITED Stopping, Sta			BALLENGER, STEVEN		
S77ATEE2010041639397	**20005980**		**10/04/2020**	**1639**	**SU**	**E 1ST ST / N JAMES ST**			
	W	N	M	44	N				
	N/A		321.285	FAILURE TO STOP IN ASSURED CLEAR DISTANCE			MCATEE, JESSE		
S77AVON2010091924541			**10/09/2020**	**1924**	**FR**	**3400-B SW BROOKSIDE DR**			
	A	N	M	18	N				
	N/A		321.285	SPEEDING 55 OR UND ZONE (6 THRU 10 OVER) Speeding 55 or Unde			MONTAVON, CHALENA		

Citation ID	Case ID/ Race/ Cit Type	Arrest ID/ Ethnicity/ Category 2	Date/ Sex/ Statute	Time/ Age/ Charge	DOW/ Residence	Address	Officer		
S77AVON2010091950282			**10/09/2020**	**1950**	**FR**	**3500-B SW BROOKSIDE DR**			
	W	N	M	29	N				
	N/A		321.285	SPEEDING 55 OR UND ZONE (1 THRU 5 OVER) Speeding 55 or Under			MONTAVON, CHALENA		
S77AVON2010131857553			**10/13/2020**	**1857**	**TU**	**1800-B SE GRIMES BLVD**			
	W	N	F	38	N				
	N/A		321.174(1)	NO VALID DRIVERS LICENSE			MONTAVON, CHALENA		
S77AVON2010131859324			**10/13/2020**	**1857**	**TU**	**1800-B SE GRIMES BLVD**			
	W	N	F	38	N				
	N/A		321.20B	FAILURE TO PROVIDE PROOF OF FINANCIAL LIABILITY No Accident			MONTAVON, CHALENA		
S77AVON2010132050155			**10/13/2020**	**0850**	**TU**	**SE 11TH ST / SE GATEWAY DR**			
	B	N	M	16	R				
	N/A		321.174(1)	NO VALID DRIVERS LICENSE			MONTAVON, CHALENA		
S77AVON2010241634366			**10/24/2020**	**1634**	**SA**	**SE 19TH ST / SE LITTLE BEAVER DR**			
	B	N	M	24	N				
	N/A		321.20B	FAILURE TO PROVIDE PROOF OF FINANCIAL LIABILITY No Accident			MONTAVON, CHALENA		
S77CURI2010011556486	**20005913**		**10/01/2020**	**1556**	**TH**	**200-B W 1ST ST**			
	W	N	F	68	N				
	N/A		321.307	FOLLOWING TOO CLOSE -			ARCURI, CHRISTIE		
S77CURI2010121603198			**10/12/2020**	**1603**	**MO**	**2800-B SE GRIMES BLVD**			
	W	N	M	38	N				
	N/A		321.20B	FAILURE TO PROVIDE PROOF OF FINANCIAL LIABILITY No Accident			ARCURI, CHRISTIE		

Citation ID	Case ID/ Race/ Cit Type	Arrest ID/ Ethnicity/ Category 2	Date/ Sex/ Statute	Time/ Age/ Charge	DOW/ Residence	Address	Officer		
S77DOVE2010021927126	**20005952**		**10/02/2020**	**1927**	**FR**	**SE 37TH ST / SE GRIMES BLVD**			
	W	N	M	44	R				
	N/A		321.285	FAILURE TO STOP IN ASSURED CLEAR DISTANCE			DOVE, JEREMY		
S77DOVE2010251338469	**20006420**		**10/25/2020**	**1338**	**SU**	**1900 SE 37TH ST**			
	W	N	M	65	R				
	N/A		321.288	FAIL TO MAINTAIN CONTROL			DOVE, JEREMY		
S77GOOD2010232303198			**10/23/2020**	**2303**	**FR**	**1800 SE PRINCETON DR**			
	W	N	F	49	N				
	N/A		321.218	DRIVING WHILE LICENSE DENIED,SUSP,CANCELLED OR REVOKED			GOOD, ADAM		
S77GOOD2010240128239			**10/24/2020**	**0128**	**SA**	**2300-B SE GRIMES BLVD**			
	B	N	F	20	N				
	N/A		321.174(1)	NO VALID DRIVERS LICENSE			GOOD, ADAM		
S77GOOD2010240130030			**10/24/2020**	**0128**	**SA**	**2300-B SE GRIMES BLVD**			
	B	N	F	20	N				
	N/A		321.20B	FAILURE TO PROVIDE PROOF OF FINANCIAL LIABILITY No Accident			GOOD, ADAM		
S77GOOD2010262204511	**20006467**		**10/26/2020**	**2204**	**MO**	**601 SE DOVETAIL RD**			
	W	N	F	22	R				
	N/A		321.256	FAIL TO OBEY TRAFFIC CONTROL DEVICE			GOOD, ADAM		
S77GOOD2010262208042	**20006467**		**10/26/2020**	**2204**	**MO**	**601 SE DOVETAIL RD**			
	W	N	F	23	N				
	N/A		321.174(1)	NO VALID DRIVERS LICENSE			GOOD, ADAM		

Citation ID	Case ID/ Race/ Cit Type	Arrest ID/ Ethnicity/ Category 2	Date/ Sex/ Statute	Time/ Age/ Charge	DOW/ Residence	Address	Officer		
S77HAKE2010040819183			**10/04/2020**	**0819**	**SU**	**100-B SE GRIMES BLVD**			
	B	N	F	19	N				
	N/A		321.285	SPEEDING 55 OR UND ZONE (6 THRU 10 OVER) Speeding 55 or Unde			HAKE, MICHAEL		
S77HAKE2010041049504			**10/04/2020**	**1049**	**SU**	**800-B SW 37TH ST**			
	W	N	F	39	N				
	N/A		321.285	SPEEDING 55 OR UND ZONE (6 THRU 10 OVER) Speeding 55 or Unde			HAKE, MICHAEL		
S77HAKE2010120800100			**10/12/2020**	**0800**	**MO**	**1300-B NW 8TH ST**			
	W	N	M	18	N				
	N/A		321.285	SPEEDING 55 OR UND ZONE (6 THRU 10 OVER) Speeding 55 or Unde			HAKE, MICHAEL		
S77HAKE2010120913581	**20006137**		**10/12/2020**	**0913**	**MO**	**SE 37TH ST / SE GRIMES BLVD**			
	W	U	M	30	N				
	N/A		321.288(1)	FAILURE TO MAINTAIN CONTROL			HAKE, MICHAEL		
S77HAKE2010281108360			**10/28/2020**	**1108**	**WE**	**100-B SE GRIMES BLVD**			
	W	N	M	33	R				
	N/A		321.285	SPEEDING 55 OR UND ZONE (6 THRU 10 OVER) Speeding 55 or Unde			HAKE, MICHAEL		
S77IKER2010111606364			**10/11/2020**	**1600**	**SU**	**700-B SW 37TH ST**			
	W	N	M	17	N				
	N/A		321.285	SPEEDING 55 OR UND ZONE (1 THRU 5 OVER) Speeding 55 or Under			RINIKER, MICHAEL		
S77IKER2010191914575	**20006310**		**10/19/2020**	**1907**	**MO**	**1000-B SW 19TH ST**			
	W	N	M	38	N				
	N/A		321.20B	FAILURE TO PROVIDE PROOF OF FINANCIAL LIABILITY No Accident			RINIKER, MICHAEL		

Citation ID	Case ID/ Race/ Cit Type	Arrest ID/ Ethnicity/ Category 2	Date/ Sex/ Statute	Time/ Age/ Charge	DOW/ Residence	Address	Officer		
S77IKER2010191920377	**20006310**		**10/19/2020**	**1907**	**MO**	**1000-B SW 19TH ST**			
	W	N	M	38	N				
	N/A		321.218	DRIVING WHILE LICENSE DENIED,SUSP,CANCELLED OR REVOKED			RINIKER, MICHAEL		
S77JMAY2010201609297	**20006333**		**10/20/2020**	**1609**	**TU**	**NW 142ND ST / NW 70TH AVE**			
	W	N	M	15	N				
	N/A		321.285	FAILURE TO STOP IN ASSURED CLEAR DISTANCE			MAY, JOHN		
S77MUMM2010222115109			**10/22/2020**	**2115**	**TH**	**SE 6TH ST / S JAMES ST**			
	W	N	M	43	N				
	N/A		321.174(1)	NO VALID DRIVERS LICENSE			MUMM, JARRED		
S77NGEL2010080539217			**10/08/2020**	**0539**	**TH**	**1100-B SE GRIMES BLVD**			
	U	H	M	34	N				
	N/A		321.174(1)	NO VALID DRIVERS LICENSE			RANGEL, ALEXANDRIA		
S77NGEL2010080544358			**10/08/2020**	**0539**	**TH**	**1100-B SE GRIMES BLVD**			
	U	H	M	34	N				
	N/A		321.20B	FAILURE TO PROVIDE PROOF OF FINANCIAL LIABILITY No Accident			RANGEL, ALEXANDRIA		
S77NGEL2010150514493			**10/15/2020**	**0514**	**TH**	**1800-B SE GRIMES BLVD**			
	W	N	M	48	R				
	N/A		321.285	SPEEDING 55 OR UND ZONE (6 THRU 10 OVER) Speeding 55 or Unde			RANGEL, ALEXANDRIA		
S77NGEL2010250028146			**10/25/2020**	**0028**	**SU**	**100-B SE GRIMES BLVD**			
	B	N	F	24	N				
	N/A		321.174(1)	NO VALID DRIVERS LICENSE			RANGEL, ALEXANDRIA		

Citation ID	Case ID/ Race/ Cit Type	Arrest ID/ Ethnicity/ Category 2	Date/ Sex/ Statute	Time/ Age/ Charge	DOW/ Residence	Address	Officer		
S77NGEL2010250155067			**10/25/2020**	**0155**	**SU**	**3000-B SE GRIMES BLVD**			
	W	N	F	21	N				
	N/A		321.20B	FAILURE TO PROVIDE PROOF OF FINANCIAL LIABILITY No Accident			RANGEL, ALEXANDRIA		
S77NGER2010021657478	**20005949**		**10/02/2020**	**1623**	**FR**	**E 1ST ST / N JAMES ST**			
	W	N	M	22	N				
	N/A		321.323	UNSAFE BACKING ON HIGHWAY			BALLENGER, STEVEN		
S77NGER2010070820249			**10/07/2020**	**0820**	**WE**	**2100-B SE 11TH ST**			
	W	N	M	39	N				
	N/A		321.20B	FAILURE TO PROVIDE PROOF OF FINANCIAL LIABILITY No Accident			BALLENGER, STEVEN		
S77NGER2010241300071			**10/24/2020**	**1218**	**SA**	**700-B SE DOVETAIL RD**			
	W	N	M	21	N				
	N/A		321.193	VIOLATION OF CONDITIONS OF RESTRICTED LICENSE			BALLENGER, STEVEN		
S77NNEY2010031032289	**20005965**		**10/03/2020**	**1032**	**SA**	**101 SE GATEWAY DR**			
	W	N	F	17	N				
	N/A		321.320	FAIL TO YIELD UPON LEFT TURN			KINNEY, PHILIP		
S77NNEY2010060853330			**10/06/2020**	**0853**	**TU**	**1400-B NE LITTLE BEAVER DR**			
	A	N	F	24	R				
	N/A		321.285	SPEEDING 55 OR UND ZONE (6 THRU 10 OVER) Speeding 55 or Unde			KINNEY, PHILIP		
S77NOLD2010091525525			**10/09/2020**	**1525**	**FR**	**SE 35TH ST / SE STONEGATE DR**			
	B	N	M	31	N				
	N/A		321.288	FAIL TO MAINTAIN CONTROL			ARNOLD, BRYCE		

Citation ID	Case ID/ Race/ Cit Type	Arrest ID/ Ethnicity/ Category 2	Date/ Sex/ Statute	Time/ Age/ Charge	DOW/ Residence	Address	Officer		
S77NOLD20101 11633266			**10/11/2020**	**1633**	**SU**	**2800-B SE GRIMES BLVD**			
	W	N	M	23	R				
	N/A		321.460	SPILLING LOADS ON HIGHWAY			ARNOLD, BRYCE		
S77NOLD20101 72004378	**20006256**		**10/17/2020**	**2004**	**SA**	**951 SE GATEWAY DR**			
	W	N	M	28	N				
	N/A		321A.32(1)	DRIVING WHILE LICENSE UNDER SUSPENSION DUS -- 321A.32(1)			ARNOLD, BRYCE		
S77NOLD20101 91628589	**20006307**		**10/19/2020**	**1628**	**MO**	**NE BEAVERBROOKE BLVD / NE GRIMES BLVD**			
	W	N	M	45	R				
	N/A		321.285	FAILURE TO STOP IN ASSURED CLEAR DISTANCE			ARNOLD, BRYCE		
S77NOLD20102 61811551			**10/26/2020**	**1811**	**MO**	**700-B S JAMES ST**			
	W	H	M	18	N				
	N/A		321A.32(1)	DRIVING WHILE LICENSE UNDER SUSPENSION DUS -- 321A.32(1)			ARNOLD, BRYCE		
S77NOLD20102 81451480	**20006429**		**10/28/2020**	**1451**	**WE**	**NE BEAVERBROOKE BLVD / NE HERITAGE DR**			
	W	N	M	18	N				
	N/A		321.263	LEAVE SCENE OF ACCIDENT - FAIL TO PROVIDE AID OR INFORMATION			ARNOLD, BRYCE		
S77NOLD20102 81458481	**20006429**		**10/28/2020**	**1451**	**WE**	**NE BEAVERBROOKE BLVD / NE HERITAGE DR**			
	W	N	M	19	R				
	N/A		321.288	FAIL TO MAINTAIN CONTROL			ARNOLD, BRYCE		
S77NSON20101 82115525	**20006284**		**10/18/2020**	**2115**	**SU**	**101 SE GATEWAY DR**			
	W	N	M	16	R				
	N/A		321.306(1)	IMPROPER USE OF LANES			JOHNSON, BRIAN		

Citation ID	Case ID/ Race/ Cit Type	Arrest ID/ Ethnicity/ Category 2	Date/ Sex/ Statute	Time/ Age/ Charge	DOW/ Residence	Address	Officer		
S77OVIC2010060731358			**10/06/2020**	**0731**	**TU**	**200-B E 1ST ST**			
	W	N	M	44	N				
	N/A		321.98(1)(a)	OPERATION WITHOUT REGISTRATION CARD OR PLATE			DAUTOVIC, MEVLID		
S77OVIC2010140754220			**10/14/2020**	**0754**	**WE**	**1000-B SW 19TH ST**			
	W	H	M	48	R				
	N/A		321.285	SPEEDING 55 OR UND ZONE (11 THRU 15 OVER) Speeding 55 or Und			DAUTOVIC, MEVLID		
S77OVIC2010211151101			**10/21/2020**	**1151**	**WE**	**SE 28TH ST / SE GRIMES BLVD**			
	W	N	M	27	N				
	N/A		321.98(1)(a)	OPERATION WITHOUT REGISTRATION CARD OR PLATE			DAUTOVIC, MEVLID		
S77OVIC2010230811332			**10/23/2020**	**0811**	**FR**	**900-B SW 19TH ST**			
	W	N	M	17	N				
	N/A		321.285-E	SPEEDING 55 OR UNDER ZONE (20 MPH OVER)			DAUTOVIC, MEVLID		
S77OVIC2010241012533			**10/24/2020**	**1012**	**SA**	**2500-B SE 37TH ST**			
	W	N	F	18	N				
	N/A		321.20B	FAILURE TO PROVIDE PROOF OF FINANCIAL LIABILITY No Accident			DAUTOVIC, MEVLID		
S77OWRY2010041450455			**10/04/2020**	**1450**	**SU**	**E 1ST ST / HWY 141 NB OFF RMP**			
	W	N	F	22	N				
	N/A		321.256	FAIL TO OBEY TRAFFIC CONTROL DEVICE			LOWRY, STEVEN		
S77SALL2010130332588			**10/13/2020**	**0332**	**TU**	**3000-B SE GRIMES BLVD**			
	B	N	F	25	N				
	N/A		321.218	DRIVING WHILE LICENSE DENIED,SUSP,CANCELLED OR REVOKED			HADSALL, MATTHEW		

Citation ID	Case ID/ Race/ Cit Type	Arrest ID/ Ethnicity/ Category 2	Date/ Sex/ Statute	Time/ Age/ Charge	DOW/ Residence	Address	Officer		
S77TROM2010282127162	**20006526**		**10/28/2020**	**2127**	**WE**	**1101 NE JACOB ST**			
	W	N	M	50	N				
	N/A		321.288(1)	FAILURE TO MAINTAIN CONTROL			NYSTROM, KIRSTEN		
WS77AVON201007163540			**10/07/2020**	**1635**	**WE**	**SE 37TH ST / SE GLENSTONE DR**			
	B	N	M	34	R				
	N/A	WRITTEN WARNING	321.404	IMPROPER BRAKE LIGHT			MONTAVON, CHALENA		
WS77AVON201007180323			**10/07/2020**	**1803**	**WE**	**2100-B NE PARK DR**			
	W	N	M	59	N				
	N/A	WRITTEN WARNING	321.285	SPEEDING 55 OR UND ZONE (6 THRU 10 OVER) Speeding 55 or Unde			MONTAVON, CHALENA		
WS77AVON201013172258			**10/13/2020**	**1722**	**TU**	**1900-B SE 37TH ST**			
	W	N	M	28	N				
	N/A	WRITTEN WARNING	321.404	IMPROPER BRAKE LIGHT			MONTAVON, CHALENA		
WS77AVON201013172431			**10/13/2020**	**1722**	**TU**	**1900-B SE 37TH ST**			
	W	N	M	31	N				
	N/A	WRITTEN WARNING	321.404A	PROHIBITED USE OF LIGHT RESTRICTING DEVICES			MONTAVON, CHALENA		
WS77AVON201013185255			**10/13/2020**	**1852**	**TU**	**1800-B SE GRIMES BLVD**			
	W	N	F	38	N				
	N/A	WRITTEN WARNING	321.37	FAIL TO DISPLAY REGISTRATION PLATE			MONTAVON, CHALENA		

Citation ID	Case ID/ Race/ Cit Type	Arrest ID/ Ethnicity/ Category 2	Date/ Sex/ Statute	Time/ Age/ Charge	DOW/ Residence	Address	Officer		
WS77AVON201 013185718			**10/13/2020**	**1852**	**TU**	**1800-B` SE GRIMES BLVD**			
	W	N	F	38	N				
	N/A	WRITTEN WARNING	321.438(1)	WINDSHIELD AND WINDOW REQUIREMENTS Violation of Windshield a			MONTAVON, CHALENA		
WS77AVON201 013205448			**10/13/2020**	**2054**	**TU**	**SE 11TH ST / SE GATEWAY DR**			
	B	N	M	16	R				
	N/A		321.322	FAIL TO OBEY STOP OR YIELD SIGN FAIL TO OBEY STOP OR YIELD S			MONTAVON, CHALENA		
WS77AVON201 015214840			**10/15/2020**	**2148**	**TH**	**SE 37TH ST / SE GATEWAY DR**			
	W	N	F	45	N				
	N/A	WRITTEN WARNING	321.388	IMPROPER REGISTRATION PLATE LAMP			MONTAVON, CHALENA		
WS77AVON201 017180514			**10/17/2020**	**1805**	**SA**	**2500-B SE 37TH ST**			
	W	N	M	17	N				
	N/A	WRITTEN WARNING	321.404	IMPROPER BRAKE LIGHT			MONTAVON, CHALENA		
WS77AVON201 017180626			**10/17/2020**	**1805**	**SA**	**2500-B SE 37TH ST**			
	W	N	M	17	N				
	N/A	WRITTEN WARNING	321.98(1)(a)	OPERATION WITHOUT REGISTRATION CARD OR PLATE			MONTAVON, CHALENA		
WS77AVON201 017183046			**10/17/2020**	**1830**	**SA**	**SE 28TH ST / SE GATEWAY DR**			
	W	N	M	53	R				
	N/A	WRITTEN WARNING	321.38	FAILURE TO MAINTAIN REGISTRATION PLATE			MONTAVON, CHALENA		

Citation ID	Case ID/ Race/ Cit Type	Arrest ID/ Ethnicity/ Category 2	Date/ Sex/ Statute	Time/ Age/ Charge	DOW/ Residence	Address	Officer		
WS77AVON201 023151154			**10/23/2020**	**1511**	**FR**	**500-B SE TRAIL RIDGE RD**			
	W	N	M	33	N				
	N/A	WRITTEN WARNING	321.438(2)	DARK WINDOW OR WINDSHIELD Dark Windows or Windshield			MONTAVON, CHALENA		
WS77AVON201 023212616			**10/23/2020**	**2126**	**FR**	**2100-B E 1ST ST**			
	W	N	M	18	N				
	N/A	WRITTEN WARNING	321.256	FAIL TO OBEY TRAFFIC CONTROL DEVICE			MONTAVON, CHALENA		
WS77AVON201 024163142			**10/24/2020**	**1631**	**SA**	**SE 19TH ST / SE LITTLE BEAVER DR**			
	B	N	M	24	R				
	N/A	WRITTEN WARNING	321.322(1)	FAIL TO OBEY STOP SIGN AND YIELD RIGHT OF WAY Fail to Yield			MONTAVON, CHALENA		
WS77AVON201 024172901			**10/24/2020**	**1729**	**SA**	**E 1ST ST / N JAMES ST**			
	W	N	M	36	R				
	N/A	WRITTEN WARNING	321.257(2)(a)	VEHICLES FAIL TO RESPOND TO STEADY RED LIGHT			MONTAVON, CHALENA		
WS77AVON201 024192104			**10/24/2020**	**1921**	**SA**	**200-B SE 19TH ST**			
	W	N	F	24	N				
	N/A	WRITTEN WARNING	321.369	DEPOSITING OR THROWING LITTER -			MONTAVON, CHALENA		
WS77CORY2010 29185011			**10/29/2020**	**1850**	**TH**	**100-B NE GRIMES BLVD**			
	W	N	F	37	R				
	N/A	WRITTEN WARNING	321.285	SPEEDING 55 OR UND ZONE (11 THRU 15 OVER) Speeding 55 or Und			CORY, IAN		

Citation ID	Case ID/ Race/ Cit Type	Arrest ID/ Ethnicity/ Category 2	Date/ Sex/ Statute	Time/ Age/ Charge	DOW/ Residence	Address	Officer		
WS77CURI201012160540			**10/12/2020**	**1605**	**MO**	**2800-B SE GRIMES BLVD**			
	W	N	M	39	R				
	N/A	WRITTEN WARNING	321.98(1)(a)	OPERATION WITHOUT REGISTRATION CARD OR PLATE			ARCURI, CHRISTIE		
WS77CURI201012175942			**10/12/2020**	**1759**	**MO**	**600-B SE GATEWAY DR**			
	U	N	F	26	N				
	N/A	WRITTEN WARNING	321.98(1)(a)	OPERATION WITHOUT REGISTRATION CARD OR PLATE			ARCURI, CHRISTIE		
WS77CURI201030120200			**10/30/2020**	**1201**	**FR**	**7000-B NW 142ND ST**			
	W	N	M	37	N				
	N/A	WRITTEN WARNING	321.98(1)(a)	OPERATION WITHOUT REGISTRATION CARD OR PLATE			ARCURI, CHRISTIE		
WS77DOVE201002210834			**10/02/2020**	**2108**	**FR**	**SE 37TH ST / S JAMES ST**			
	W	N	M	58	N				
	N/A	WRITTEN WARNING	321.387	IMPROPER REAR LAMP -			DOVE, JEREMY		
WS77GOOD201017001743			**10/17/2020**	**0017**	**SA**	**SE 19TH ST / SE DESTINATION DR**			
	U	N	M	23	N				
	N/A	WRITTEN WARNING	321.174A	OPERATION OF MOTOR VEHICLE WITH EXPIRED LICENSE			GOOD, ADAM		
WS77GOOD201017001845			**10/17/2020**	**0017**	**SA**	**SE 19TH ST / SE DESTINATION DR**			
	U	N	M	23	N				
	N/A	WRITTEN WARNING	321.385	INSUFFICIENT NUMBER OF HEADLAMPS -			GOOD, ADAM		

Citation ID	Case ID/ Race/ Cit Type	Arrest ID/ Ethnicity/ Category 2	Date/ Sex/ Statute	Time/ Age/ Charge	DOW/ Residence	Address	Officer		
WS77GOOD201 017025944	**20006246**		**10/17/2020**	**0259**	**SA**	**1905 SE 37TH ST**			
	W	N	M	36	N				
	N/A	WRITTEN WARNING	321.404	IMPROPER BRAKE LIGHT			GOOD, ADAM		
WS77GOOD201 017030027	**20006246**		**10/17/2020**	**0259**	**SA**	**1905 SE 37TH ST**			
	W	N	M	36	N				
	N/A	WRITTEN WARNING	321.20B	FAILURE TO PROVIDE PROOF OF FINANCIAL LIABILITY No Accident			GOOD, ADAM		
WS77GOOD201 017030045	**20006246**		**10/17/2020**	**0259**	**SA**	**1905 SE 37TH ST**			
	W	N	M	37	R				
	N/A	WRITTEN WARNING	321.98(1)(a)	OPERATION WITHOUT REGISTRATION CARD OR PLATE			GOOD, ADAM		
WS77GOOD201 018032041			**10/18/2020**	**0320**	**SU**	**1700-B SE 11TH ST**			
	W	N	F	16	N				
	N/A	WRITTEN WARNING	321.20B	FAILURE TO PROVIDE PROOF OF FINANCIAL LIABILITY No Accident			GOOD, ADAM		
WS77GOOD201 023043213			**10/23/2020**	**0432**	**FR**	**3700-B SE GRIMES BLVD**			
	A	N	M	38	N				
	N/A	WRITTEN WARNING	321.387	IMPROPER REAR LAMP -			GOOD, ADAM		
WS77GOOD201 023043401			**10/23/2020**	**0432**	**FR**	**3700-B SE GRIMES BLVD**			
	A	N	M	38	N				
	N/A	WRITTEN WARNING	321.324	FAIL TO YIELD TO EMERGENCY VEHICLE -			GOOD, ADAM		

Citation ID	Case ID/ Race/ Cit Type	Arrest ID/ Ethnicity/ Category 2	Date/ Sex/ Statute	Time/ Age/ Charge	DOW/ Residence	Address	Officer		
WS77GOOD201 023043558			**10/23/2020**	**0432**	**FR**	**3700-B SE GRIMES BLVD**			
	A	N	M	44	R				
	N/A	WRITTEN WARNING	321.384	FAILURE TO USE HEADLAMPS WHEN REQUIRED			GOOD, ADAM		
WS77GOOD201 023230709			**10/23/2020**	**2307**	**FR**	**1880 SE PRINCETON DR**			
	W	N	F	49	N				
	N/A	WRITTEN WARNING	321.297	DRIVING ON WRONG SIDE OF TWO WAY HIGHWAY -			GOOD, ADAM		
WS77GOOD201 026151930			**10/26/2020**	**1519**	**MO**	**SE 3RD ST / SE GATEWAY DR**			
	W	N	F	18	R				
	N/A	WRITTEN WARNING	321.322(1)	FAIL TO OBEY STOP SIGN AND YIELD RIGHT OF WAY Fail to Yield			GOOD, ADAM		
WS77GOOD201 026153711			**10/26/2020**	**1537**	**MO**	**1700-B E 1ST ST**			
	W	N	M	18	N				
	N/A	WRITTEN WARNING	321.46	NEW TITLE/REGISTRATION TRANSFER VIOLATION			GOOD, ADAM		
WS77GOOD201 026153924			**10/26/2020**	**1537**	**MO**	**1700-B E 1ST ST**			
	W	N	M	17	N				
	N/A	WRITTEN WARNING	321.20B	FAILURE TO PROVIDE PROOF OF FINANCIAL LIABILITY No Accident			GOOD, ADAM		
WS77GOOD201 027034648			**10/27/2020**	**0346**	**TU**	**SE 19TH ST / SE GRIMES BLVD**			
	B	N	F	23	R				
	N/A	WRITTEN WARNING	321.180	VIOLATION OF INSTRUCTION PERMIT LIMITATION			GOOD, ADAM		

Citation ID	Case ID/ Race/ Cit Type	Arrest ID/ Ethnicity/ Category 2	Date/ Sex/ Statute	Time/ Age/ Charge	DOW/ Residence	Address	Officer		
WS77HAKE201004082405			**10/04/2020**	**0824**	**SU**	**100-B SE GRIMES BLVD**			
	B	N	F	19	N				
	N/A	WRITTEN WARNING	321.174(3)	FAILURE TO POSSESS VALID LICENSE WHILE OPER. MOTOR VEH.			HAKE, MICHAEL		
WS77HAKE201018075724			**10/18/2020**	**0757**	**SU**	**800-B SW 37TH ST**			
	W	N	M	70	R				
	N/A	WRITTEN WARNING	321.285	SPEEDING 55 OR UND ZONE (1 THRU 5 OVER) Speeding 55 or Under			HAKE, MICHAEL		
WS77HAKE201018132738			**10/18/2020**	**1327**	**SU**	**800-B SE 37TH ST**			
	W	N	F	31	N				
	N/A	WRITTEN WARNING	321.285	SPEEDING 55 OR UND ZONE (1 THRU 5 OVER) Speeding 55 or Under			HAKE, MICHAEL		
WS77HAKE201020090240			**10/20/2020**	**0902**	**TU**	**2300-B SE 37TH ST**			
	B	N	F	31	N				
	N/A	WRITTEN WARNING	321.285	SPEEDING 55 OR UND ZONE (1 THRU 5 OVER) Speeding 55 or Under			HAKE, MICHAEL		
WS77HAKE201020090653			**10/20/2020**	**0902**	**TU**	**2300-B SE 37TH ST**			
	B	N	F	31	R				
	N/A	WRITTEN WARNING	321.174(3)	FAILURE TO POSSESS VALID LICENSE WHILE OPER. MOTOR VEH.			HAKE, MICHAEL		
WS77HAKE201020123235			**10/20/2020**	**1232**	**TU**	**900-B SW 37TH ST**			
	W	N	M	42	N				
	N/A	WRITTEN WARNING	321.285-F	SPEEDING OVER 55 ZONE (1 THRU 5 OVER)			HAKE, MICHAEL		

Citation ID	Case ID/ Race/ Cit Type	Arrest ID/ Ethnicity/ Category 2	Date/ Sex/ Statute	Time/ Age/ Charge	DOW/ Residence	Address	Officer		
WS77HAKE201028100442			**10/28/2020**	**1004**	**WE**	**800-B SW 37TH ST**			
	W	N	M	69	N				
	N/A	WRITTEN WARNING	321.285	SPEEDING 55 OR UND ZONE (1 THRU 5 OVER) Speeding 55 or Under			HAKE, MICHAEL		
WS77IKER201012170300			**10/12/2020**	**1655**	**MO**	**700-B S JAMES ST**			
	W	N	M	32	R				
	N/A	WRITTEN WARNING	321.285	SPEEDING 55 OR UND ZONE (16 THRU 20 OVER)			RINIKER, MICHAEL		
WS77IKER201019192452	**20006310**		**10/19/2020**	**1902**	**MO**	**1000-B SW 19TH ST**			
	W	N	M	38	N				
	N/A	WRITTEN WARNING	321.285	SPEEDING 55 OR UND ZONE (16 THRU 20 OVER)			RINIKER, MICHAEL		
WS77JMAY201013192154			**10/13/2020**	**1921**	**TU**	**400-B SE DESTINATION DR**			
	W	N	M	38	N				
	N/A	WRITTEN WARNING	321.99	IMPROPER USE OF REGISTRATION IMPROPER USE OF REGISTRATION			MAY, JOHN		
WS77LLIN201028051310			**10/28/2020**	**0513**	**WE**	**1500-B SE GRIMES BLVD**			
	W	H	M	36	R				
	N/A	WRITTEN WARNING	321.387	IMPROPER REAR LAMP -			LEWELLIN, LARRY		
WS77MUMM201022211331			**10/22/2020**	**2113**	**TH**	**SE 6TH ST / S JAMES ST**			
	W	N	M	37	N				
	N/A	WRITTEN WARNING	321.256	FAIL TO OBEY TRAFFIC CONTROL DEVICE			MUMM, JARRED		

Citation ID	Case ID/ Race/ Cit Type	Arrest ID/ Ethnicity/ Category 2	Date/ Sex/ Statute	Time/ Age/ Charge	DOW/ Residence	Address	Officer		
WS77NGEL2010 08065343			**10/08/2020**	**0653**	**TH**	**1ST ST TO HWY 141 SB RMP / SE GRIMES BLVD**			
	W	N	M	22	R				
	N/A	WRITTEN WARNING	321.388	IMPROPER REGISTRATION PLATE LAMP -			RANGEL, ALEXANDRIA		
WS77NGEL2010 15050030			**10/15/2020**	**0500**	**TH**	**1800-B SE GRIMES BLVD**			
	W	N	M	37	N				
	N/A	WRITTEN WARNING	321.385	INSUFFICIENT NUMBER OF HEADLIGHTS			RANGEL, ALEXANDRIA		
WS77NGEL2010 24052930			**10/24/2020**	**0529**	**SA**	**1800-B SE GRIMES BLVD**			
	W	N	F	59	N				
	N/A	WRITTEN WARNING	321.285	SPEEDING 55 OR UND ZONE (6 THRU 10 OVER) Speeding 55 or Unde			RANGEL, ALEXANDRIA		
WS77NGEL2010 24064450			**10/24/2020**	**0644**	**SA**	**3700-B SE GRIMES BLVD**			
	W	N	M	61	R				
	N/A	WRITTEN WARNING	321.387	IMPROPER REAR LAMP -			RANGEL, ALEXANDRIA		
WS77NGEL2010 25003108			**10/25/2020**	**0031**	**SU**	**100-B SE GRIMES BLVD**			
	B	N	F	22	N				
	N/A	WRITTEN WARNING	321.285	SPEEDING 55 OR UND ZONE (11 THRU 15 OVER) Speeding 55 or Und			RANGEL, ALEXANDRIA		
WS77NGEL2010 25015835			**10/25/2020**	**0158**	**SU**	**3000-B SE GRIMES BLVD**			
	W	N	F	19					
	N/A	WRITTEN WARNING	321.285	SPEEDING 55 OR UND ZONE (6 THRU 10 OVER) Speeding 55 or Unde			RANGEL, ALEXANDRIA		

Citation ID	Case ID/ Race/ Cit Type	Arrest ID/ Ethnicity/ Category 2	Date/ Sex/ Statute	Time/ Age/ Charge	DOW/ Residence	Address	Officer		
WS77NGER201001135047			**10/01/2020**	**1350**	**TH**	**500-B SW BROOKSIDE DR**			
	W	N	M	15	N				
	N/A	WRITTEN WARNING	321.285	SPEEDING 55 OR UND ZONE (11 THRU 15 OVER) Speeding 55 or Und			BALLENGER, STEVEN		
WS77NGER201007074140			**10/07/2020**	**0741**	**WE**	**400-B SW BROOKSIDE DR**			
	W	N	F	46	N				
	N/A	WRITTEN WARNING	321.285	SPEEDING 55 OR UND ZONE (11 THRU 15 OVER) Speeding 55 or Und			BALLENGER, STEVEN		
WS77NGER201007081823			**10/07/2020**	**0818**	**WE**	**2100-B SE 11TH ST**			
	W	N	M	45	N				
	N/A	WRITTEN WARNING	321.98(1)(a)	OPERATION WITHOUT REGISTRATION CARD OR PLATE			BALLENGER, STEVEN		
WS77NGER201007093952			**10/07/2020**	**0939**	**WE**	**SE 19TH ST / SE PRINCETON DR**			
	W	N	M	19	N				
	N/A	WRITTEN WARNING	321.285	SPEEDING 55 OR UND ZONE (11 THRU 15 OVER) Speeding 55 or Und			BALLENGER, STEVEN		
WS77NGER201007094132			**10/07/2020**	**0939**	**WE**	**SE 19TH ST / SE PRINCETON DR**			
	W	N	M	26	R				
	N/A	WRITTEN WARNING	321.98(1)(a)	OPERATION WITHOUT REGISTRATION CARD OR PLATE			BALLENGER, STEVEN		
WS77NGER201019121745	**20006297**		**10/19/2020**	**1217**	**MO**	**NE BEAVERBROOKE BLVD / NE GRIMES BLVD**			
	B	N	F	20	N				
	N/A	WRITTEN WARNING	321.307	FOLLOWING TOO CLOSE -			BALLENGER, STEVEN		

Citation ID	Case ID/ Race/ Cit Type	Arrest ID/ Ethnicity/ Category 2	Date/ Sex/ Statute	Time/ Age/ Charge	DOW/ Residence	Address	Officer		
WS77NGER201023054438			**10/23/2020**	**0854**	**FR**	**2200-B E 1ST ST**			
	W	N	M	29	N				
	N/A	WRITTEN WARNING	321.285	SPEEDING 55 OR UND ZONE (11 THRU 15 OVER) Speeding 55 or Und			BALLENGER, STEVEN		
WS77NGER201023085438			**10/23/2020**	**0854**	**FR**	**2200-B E 1ST ST**			
	W	N	M	29	N				
	N/A	WRITTEN WARNING	321.285	SPEEDING 55 OR UND ZONE (11 THRU 15 OVER) Speeding 55 or Und			BALLENGER, STEVEN		
WS77NGER201026074432			**10/26/2020**	**0744**	**MO**	**1700-B E 1ST ST**			
	W	N	M	31	N				
	N/A	WRITTEN WARNING	321.256	FAIL TO OBEY TRAFFIC CONTROL DEVICE			BALLENGER, STEVEN		
WS77NNEY201010124020			**10/10/2020**	**1240**	**SA**	**700-B SE 37TH ST**			
	W	N	F	29	N				
	N/A	WRITTEN WARNING	321.285	SPEEDING 55 OR UND ZONE (11 THRU 15 OVER) Speeding 55 or Und			KINNEY, PHILIP		
WS77NNEY201015135135			**10/15/2020**	**1351**	**TH**	**1400-B SE LITTLE BEAVER DR**			
	W	N	M	64	R				
	N/A	WRITTEN WARNING	321.285	SPEEDING 55 OR UND ZONE (16 THRU 20 OVER)			KINNEY, PHILIP		
WS77NNEY201020123925			**10/20/2020**	**1239**	**TU**	**400-B NE BEAVERBROOKE BLVD**			
	W	N	F	63	N				
	N/A	WRITTEN WARNING	321.285	SPEEDING 55 OR UND ZONE (11 THRU 15 OVER) Speeding 55 or Und			KINNEY, PHILIP		

Citation ID	Case ID/ Race/ Cit Type	Arrest ID/ Ethnicity/ Category 2	Date/ Sex/ Statute	Time/ Age/ Charge	DOW/ Residence	Address	Officer		
WS77NNEY201028111210			**10/28/2020**	**1112**	**WE**	**2100-B NE 18TH ST**			
	W	N	F	45	N				
	N/A	WRITTEN WARNING	321.285	SPEEDING 55 OR UND ZONE (16 THRU 20 OVER)			KINNEY, PHILIP		
WS77NOLD201010191450			**10/10/2020**	**1914**	**SA**	**E 1ST ST / N JAMES ST**			
	W	N	M	40	N				
	N/A	WRITTEN WARNING	321.256	FAIL TO OBEY TRAFFIC CONTROL DEVICE			ARNOLD, BRYCE		
WS77NOLD201015185558			**10/15/2020**	**1855**	**TH**	**2800-B SE GRIMES BLVD**			
	B	N	F	20	R				
	N/A	WRITTEN WARNING	321.256	FAIL TO OBEY TRAFFIC CONTROL DEVICE			ARNOLD, BRYCE		
WS77NOLD201017202417	**20006256**		**10/17/2020**	**2024**	**SA**	**951 SE GATEWAY DR**			
	W	N	M	28	R				
	N/A	WRITTEN WARNING	321.384	FAILURE TO USE HEADLAMPS WHEN REQUIRED			ARNOLD, BRYCE		
WS77NOLD201024152850	**20006395**		**10/24/2020**	**1528**	**SA**	**3105 SE LIBERTY DR**			
	B	N	M	18	N				
	N/A	WRITTEN WARNING	321.263	DNU - INFORMATION AND AID/LEAVING SCENE OF ACCIDENT (SMMS)			ARNOLD, BRYCE		
WS77NOLD201026154458			**10/26/2020**	**1544**	**MO**	**SE 11TH ST / SE DESTINATION DR**			
	B	N	M	23	N				
	N/A	WRITTEN WARNING	321.24	REGISTRATION VIOLATION			ARNOLD, BRYCE		

Citation ID	Case ID/ Race/ Cit Type	Arrest ID/ Ethnicity/ Category 2	Date/ Sex/ Statute	Time/ Age/ Charge	DOW/ Residence	Address	Officer		
WS77NOLD201026181420			**10/26/2020**	**1814**	**MO**	**700-B S JAMES ST**			
	W	H	M	21	R				
	N/A	WRITTEN WARNING	321.20B	FAILURE TO PROVIDE PROOF OF FINANCIAL LIABILITY No Accident			ARNOLD, BRYCE		
WS77NSON201003165200			**10/03/2020**	**1651**	**SA**	**SE 19TH ST / SE GRIMES BLVD**			
	A	N	M	15	R				
	N/A	WRITTEN WARNING	321.438(2)	DARK WINDOW OR WINDSHIELD Dark Windows or Windshield			JOHNSON, BRIAN		
WS77NSON201020201724			**10/20/2020**	**2017**	**TU**	**300-B SE GRIMES BLVD**			
	W	N	F	23	N				
	N/A	WRITTEN WARNING	321.385	INSUFFICIENT NUMBER OF HEADLIGHTS			JOHNSON, BRIAN		
WS77NSON201020201855			**10/20/2020**	**2017**	**TU**	**300-B SE GRIMES BLVD**			
	W	N	F	23	N				
	N/A	WRITTEN WARNING	321.20B	FAILURE TO PROVIDE PROOF OF FINANCIAL LIABILITY No Accident			JOHNSON, BRIAN		
WS77NSON201020204442			**10/20/2020**	**2044**	**TU**	**300-B SE GRIMES BLVD**			
	H	N	M	34	N				
	N/A	WRITTEN WARNING	321.403	IMPROPER USE OF AUXILIARY DRIVING LIGHTS -			JOHNSON, BRIAN		
WS77NSON201020205844			**10/20/2020**	**2058**	**TU**	**3000-B SE GRIMES BLVD**			
	W	N	F	27	N				
	N/A	WRITTEN WARNING	321.385	INSUFFICIENT NUMBER OF HEADLIGHTS			JOHNSON, BRIAN		

Citation ID	Case ID/ Race/ Cit Type	Arrest ID/ Ethnicity/ Category 2	Date/ Sex/ Statute	Time/ Age/ Charge	DOW/ Residence	Address	Officer		
WS77NSON201 020210033			**10/20/2020**	**2058**	**TU**	**3000-B SE GRIMES BLVD**			
	W	N	F	27	N				
	N/A	WRITTEN WARNING	321.20B	FAILURE TO PROVIDE PROOF OF FINANCIAL LIABILITY No Accident			JOHNSON, BRIAN		
WS77OVIC2010 08080215			**10/08/2020**	**0802**	**TH**	**900-B SW 19TH ST**			
	W	H	M	35	N				
	N/A	WRITTEN WARNING	321.285	SPEEDING 55 OR UND ZONE (6 THRU 10 OVER) Speeding 55 or Unde			DAUTOVIC, MEVLID		
WS77OVIC2010 15080233			**10/15/2020**	**0802**	**TH**	**1000-B SW 19TH ST**			
	W	N	F	67	R				
	N/A	WRITTEN WARNING	321.285	SPEEDING 55 OR UND ZONE (6 THRU 10 OVER) Speeding 55 or Unde			DAUTOVIC, MEVLID		
WS77OVIC2010 17130549			**10/17/2020**	**1305**	**SA**	**1000-B SW 19TH ST**			
	W	N	M	25	N				
	N/A	WRITTEN WARNING	321.285	SPEEDING 55 OR UND ZONE (6 THRU 10 OVER) Speeding 55 or Unde			DAUTOVIC, MEVLID		
WS77OVIC2010 17130922			**10/17/2020**	**1305**	**SA**	**1000-B SW 19TH ST**			
	W	N	M	31	N				
	N/A	WRITTEN WARNING	321.445	FAIL TO MAINTAIN SAFETY BELTS - FAIL TO MAINTAIN SAFETY BELT			DAUTOVIC, MEVLID		
WS77OVIC2010 21082219			**10/21/2020**	**0822**	**WE**	**1000-B NE 19TH ST**			
	W	N	F	34	N				
	N/A	WRITTEN WARNING	321.285	SPEEDING 55 OR UND ZONE (6 THRU 10 OVER) Speeding 55 or Unde			DAUTOVIC, MEVLID		

Citation ID	Case ID/ Race/ Cit Type	Arrest ID/ Ethnicity/ Category 2	Date/ Sex/ Statute	Time/ Age/ Charge	DOW/ Residence	Address	Officer		
WS77OVIC201021103640			**10/21/2020**	**1036**	**WE**	**NW 3RD ST / NW CALISTA CT**			
	W	N	M	79	R				
	N/A	WRITTEN WARNING	321.218	DRIVING WHILE LICENSE DENIED,SUSP,CANCELLED OR REVOKED			DAUTOVIC, MEVLID		
WS77OVIC201021103741			**10/21/2020**	**1036**	**WE**	**NW 3RD ST / NW CALISTA CT**			
	W	N	M	79	R				
	N/A	WRITTEN WARNING	321.98(1)(a)	OPERATION WITHOUT REGISTRATION CARD OR PLATE			DAUTOVIC, MEVLID		
WS77OVIC201024101558			**10/24/2020**	**1015**	**SA**	**2500-B SE 37TH ST**			
	W	N	F	18	N				
	N/A	WRITTEN WARNING	321.34	REGISTRATION VIOLATION			DAUTOVIC, MEVLID		
WS77OVIC201030115041			**10/30/2020**	**1150**	**FR**	**1000-B SW 19TH ST**			
	W	N	F	61	N				
	N/A	WRITTEN WARNING	321.285	SPEEDING 55 OR UND ZONE (11 THRU 15 OVER) Speeding 55 or Und			DAUTOVIC, MEVLID		
WS77SALL201006053739			**10/06/2020**	**0537**	**TU**	**E 1ST ST / NE MAIN ST**			
	W	N	M	52	N				
	N/A	WRITTEN WARNING	321.285	SPEEDING 55 OR UND ZONE (6 THRU 10 OVER) Speeding 55 or Unde			HADSALL, MATTHEW		
WS77SALL201009225848			**10/09/2020**	**2258**	**FR**	**1700-B NE GRIMES BLVD**			
	W	N	M	68	N				
	N/A	WRITTEN WARNING	321.404	IMPROPER BRAKE LIGHT			HADSALL, MATTHEW		

Citation ID	Case ID/ Race/ Cit Type	Arrest ID/ Ethnicity/ Category 2	Date/ Sex/ Statute	Time/ Age/ Charge	DOW/ Residence	Address	Officer		
WS77SALL2010 12231851			**10/12/2020**	**2318**	**MO**	**E 1ST ST / SE EWING ST**			
	U	N	M	65	U				
	N/A	WRITTEN WARNING	321.404	IMPROPER BRAKE LIGHT			HADSALL, MATTHEW		
WS77SALL2010 13032805			**10/13/2020**	**0328**	**TU**	**3000-B SE GRIMES BLVD**			
	B	N	F	25	R				
	N/A	WRITTEN WARNING	321.387	IMPROPER REAR LAMP -			HADSALL, MATTHEW		
WS77SALL2010 13051211			**10/13/2020**	**0512**	**TU**	**300-B SE 19TH ST**			
	W	N	F	60	R				
	N/A	WRITTEN WARNING	321.384	FAILURE TO USE HEADLAMPS WHEN REQUIRED			HADSALL, MATTHEW		
WS77SALL2010 13064327			**10/13/2020**	**0643**	**TU**	**E 1ST ST / NE DESTINATION DR**			
	W	N	M	21	N				
	N/A	WRITTEN WARNING	321.256	FAIL TO OBEY TRAFFIC CONTROL DEVICE			HADSALL, MATTHEW		
WS77SALL2010 18000941			**10/18/2020**	**0009**	**SU**	**1200-B SE GATEWAY DR**			
	W	N	M	20	N				
	N/A	WRITTEN WARNING	321.404	IMPROPER BRAKE LIGHT			HADSALL, MATTHEW		
WS77SALL2010 18030208			**10/18/2020**	**0302**	**SU**	**2600-B SE GRIMES BLVD**			
	B	N	F	21	R				
	N/A	WRITTEN WARNING	321.404	IMPROPER BRAKE LIGHT			HADSALL, MATTHEW		

Citation ID	Case ID/ Race/ Cit Type	Arrest ID/ Ethnicity/ Category 2	Date/ Sex/ Statute	Time/ Age/ Charge	DOW/ Residence	Address	Officer		
WS77SALL2010 21035109			**10/21/2020**	**0351**	**WE**	**2000-B SE 37TH ST**			
	W	N	M	56	R				
	N/A	WRITTEN WARNING	321.404	IMPROPER BRAKE LIGHT			HADSALL, MATTHEW		
WS77TROM201 030025344			**10/30/2020**	**0253**	**FR**	**SE 6TH ST / S JAMES ST**			
	W	N	F	17	N				
	N/A	WRITTEN WARNING	321.322	FAIL TO OBEY STOP OR YIELD SIGN FAIL TO OBEY STOP OR YIELD S			NYSTROM, KIRSTEN		
WS77UTTE2010 08021557			**10/08/2020**	**0215**	**TH**	**200-B SE 37TH ST**			
	B	N	M	42	N				
	N/A	WRITTEN WARNING	321.20B	FAILURE TO PROVIDE PROOF OF FINANCIAL LIABILITY No Accident			SCHUTTE, ROBERT		
WS77WARD201 007235022			**10/07/2020**	**2350**	**WE**	**2300-B SE 37TH ST**			
	B	N	M	26	N				
	N/A	WRITTEN WARNING	321.285-D	SPEEDING 55 OR UNDER ZONE (16 THRU 20)			WARD, GREGORY		

Grimes - Incident Counts

Total: 100 Incidents With 118 Charges

Incidents By The Highest Charge - Grimes			
Year	Month	Charge	Count
2020	Oct		10
		ASSAULT CAUSING BODILY INJURY OR MENTAL ILLNESS	1
		BURGLARY 3RD DEGREE	7
		BURGLARY 3RD DEGREE - MOTOR VEHICLE, 1st Offense	1
		CONFISCATED PROPERTY	2
		CONTEMPT - VIOLATION OF NO CONTACT/PROTECTIVE ORDER	2
		DOA - DEATH INVESTIGATION	1
		DOMESTIC ABUSE ASSAULT- INJURY OR MENTAL ILLNESS - 1ST OFFEN	1
		DRIVING WHILE BARRED - HABITUAL OFFENDER	2
		EXTORTION -- Expose to Ridicule/Hatred/Contempt	2
		FAILURE TO MAINTAIN CONTROL	1
		FOUND PROPERTY	1
		FRAUDULENT PRACTICE 1ST DEGREE -- Other Means, over $10,000	1
		FRAUDULENT PRACTICE 2ND DEGREE -- Other Means, Over $1,000 U	1
		FRAUDULENT PRACTICE 5TH DEGREE -- Other Means Under $200	1
		HARASSMENT - 1ST DEGREE - Threaten Forcible Felony	1
		HARASSMENT - 3RD DEGREE - Communicate	3
		IDENTITY THEFT	1
		INFORMATION	5

2020	Oct	LEAVE SCENE OF ACCIDENT - FAIL TO PROVIDE AID OR INFORMATION	2
		LEAVE SCENE OF ACCIDENT - PROPERTY DAMAGE ONLY	3
		MENTAL CASE	3
		OPERATING WHILE UNDER THE INFLUENCE 1ST OFFENSE	2
		POSSESSION OF A CONTROLLED SUBSTANCE	1
		POSSESSION OF A CONTROLLED SUBSTANCE, 3RD OR SUBSEQUENT OFFE	1
		REPORTING ACCIDENTS - DAMAGE > $1000	19
		ROBBERY 1ST DEGREE -- Armed w/ Dangerous Weapon	1
		RUNAWAY	1
		SEXUAL ABUSE INVESTIGATION	1
		SICK AND CARE	1
		SUSPICIOUS ACTIVITY	1
		THEFT 1ST DEGREE	2
		THEFT 2ND DEGREE -- General Over $1,000 Under $10,000	1
		THEFT 5TH DEGREE -- Other Means Under $200	10
		TRESPASS 1ST OFFENSE- Knowingly Trespass Upon Property of A	1
		UNAUTHORIZED USE OF CREDIT CARD UNDER $1000 Credit Card Frau	1
		VERBAL DOMESTIC	1
		VIOLATION OF NO CONTACT OR PROTECTIVE ORDER	1
		WANTED PERSON - OTHER IOWA	1
		WANTED PERSON - POLK COUNTY WARRANT	2
		Month Total	***100***
	Year Total		100

All Incident Charges - Grimes			
Year	Month	Charge	Charge Count
2020	Oct		10
		ASSAULT CAUSING BODILY INJURY OR MENTAL ILLNESS	1
		BURGLARY 3RD DEGREE	7
		BURGLARY 3RD DEGREE - MOTOR VEHICLE, 1st Offense	1
		CONFISCATED PROPERTY	2
		CONTEMPT - VIOLATION OF NO CONTACT/PROTECTIVE ORDER	2
		DOA - DEATH INVESTIGATION	1
		DOMESTIC ABUSE ASSAULT- INJURY OR MENTAL ILLNESS - 1ST OFFEN	1
		DRIVING WHILE BARRED - HABITUAL OFFENDER	3
		DRIVING WHILE LICENSE DENIED OR REVOKED (SRMS)	1
		EXTORTION -- Expose to Ridicule/Hatred/Contempt	2
		FAIL TO OBEY TRAFFIC CONTROL DEVICE	1
		FAILURE TO MAINTAIN CONTROL	2
		FAILURE TO PROVIDE PROOF OF FINANCIAL LIABILITY No Accident	1
		FOUND PROPERTY	1
		FRAUDULENT PRACTICE 1ST DEGREE -- Other Means, over $10,000	1
		FRAUDULENT PRACTICE 2ND DEGREE -- Other Means, Over $1,000 U	1
		FRAUDULENT PRACTICE 5TH DEGREE -- Other Means Under $200	1
		HARASSMENT - 1ST DEGREE - Threaten Forcible Felony	1
		HARASSMENT - 3RD DEGREE - Communicate	3

2020	Oct	IDENTITY THEFT	1
		IMPOUND - NO HOLD	1
		INFORMATION	5
		LEAVE SCENE OF ACCIDENT - FAIL TO PROVIDE AID OR INFORMATION	2
		LEAVE SCENE OF ACCIDENT - PROPERTY DAMAGE ONLY	3
		MENTAL CASE	3
		NO VALID DRIVERS LICENSE	1
		OPEN CONTAINER - DRIVER > 21 OPEN CONTAINER - DRIVER > 21	1
		OPERATING WHILE UNDER THE INFLUENCE 1ST OFFENSE	2
		POSSESSION OF A CONTROLLED SUBSTANCE	1
		POSSESSION OF A CONTROLLED SUBSTANCE, 3RD OR SUBSEQUENT OFFE	1
		POSSESSION OF DRUG PARAPHERNALIA	2
		RECOVERY OF RUNAWAY	1
		REPORTING ACCIDENTS - DAMAGE > $1000	21
		ROBBERY 1ST DEGREE -- Armed w/ Dangerous Weapon	1
		RUNAWAY	1
		SEXUAL ABUSE INVESTIGATION	1
		SICK AND CARE	1
		SUSPICIOUS ACTIVITY	1
		THEFT 1ST DEGREE	3
		THEFT 2ND DEGREE -- General Over $1,000 Under $10,000	1
		THEFT 5TH DEGREE -- Other Means Under $200	10
		TRESPASS 1ST OFFENSE- Knowingly Trespass Upon Property of A	1
		UNAUTHORIZED USE OF CREDIT CARD UNDER $1000 Credit Card Frau	1

2020	Oct	VERBAL DOMESTIC	1
		VIOLATION OF NO CONTACT OR PROTECTIVE ORDER	1
		WANTED PERSON - OTHER IOWA	2
		WANTED PERSON - POLK COUNTY WARRANT	5
		Month Total	*118*
	Year Total		118

Grimes - Incidents Detail List

Report Month: October 2020

Total: 100 Incidents With 108 Charges

inci id	DateRept/ ChrgCnt	HourRept / ArrChrg	Address/ Charge Desc	Charge Type	Premise/ CS Status	Invst Stats	DOW1/ Dispostn	DOW2 / Officer
20005905	**10/01/2020**	**0953**	**240 S JAMES ST**		**RESIDENCE/HOME**		**TH**	**TH**
	1	708.7(4)	HARASSMENT - 3RD DEGREE - Communicate	S	SUSPENDED			BALLENGER, STEVEN
20005913	**10/01/2020**	**1540**	**200-B W 1ST ST**		**HIGHWAY/ROAD/ALLEY**		**TH**	**TH**
	1	321.266(2)	REPORTING ACCIDENTS - DAMAGE > $1000	S	CASE FILED			ARCURI, CHRISTIE
20005918	**10/01/2020**	**1726**	**605 SE GATEWAY DR**		**RESIDENCE/HOME**		**WE**	**WE**
	1	SEXINV	SEXUAL ABUSE INVESTIGATION	S	OPEN - MORE INVESTIGATION	OPEN-MORE INVESTIGATION		MONTAVON, CHALENA
20005939	**10/02/2020**	**1141**	**904 SE CROSSINGS LN**		**RESIDENCE/HOME**		**TU**	**TU**
	1	715A.8(3)-B	IDENTITY THEFT	S	SUSPENDED	SUSPENDED		BALLENGER, STEVEN
20005944	**10/02/2020**	**1354**	**1000 SE 11TH ST**		**RESIDENCE/HOME**		**FR**	**FR**
	1	664A.7(1)	CONTEMPT - VIOLATION OF NO CONTACT/PROTECTIVE ORDER	S	EXCEPTIONALLY CLEARED		WARRANT ISSUED	REES, HALEIGH
20005945	**10/02/2020**	**1434**	**1800 SE GATEWAY DR**		**COMMERCIAL/OFFICE BUILDING**		**TH**	**FR**
	1	PROPF	FOUND PROPERTY		SUSPENDED			BALLENGER, STEVEN
20005949	**10/02/2020**	**1623**	**E 1ST ST / N JAMES ST**		**HIGHWAY/ROAD/ALLEY**		**FR**	**FR**
	1	321.266(2)	REPORTING ACCIDENTS - DAMAGE > $1000	S	CASE FILED			BALLENGER, STEVEN

inci id	DateRept/ ChrgCnt	HourRept / ArrChrg	Address/ Charge Desc	Charge Type	Premise/ CS Status	Invst Stats	DOW1/ Dispostn	DOW2 / Officer
20005952	**10/02/2020**	**1906**	**SE 37TH ST / SE GRIMES BLVD**		**HIGHWAY/ROAD/ALLEY**		**FR**	**FR**
	1	321.266(2)	REPORTING ACCIDENTS - DAMAGE > $1000	S	SUSPENDED			DOVE, JEREMY
20005965	**10/03/2020**	**0954**	**E 1ST ST / SE GATEWAY DR**		**HIGHWAY/ROAD/ALLEY**		**SA**	**SA**
	1	321.266(2)	REPORTING ACCIDENTS - DAMAGE > $1000	S	CASE FILED			KINNEY, PHILIP
20005967	**10/03/2020**	**1230**	**703 SE DOVETAIL RD**		**RESIDENCE/HOME**		**FR**	**FR**
	1	715A.6(2)(c)	UNAUTHORIZED USE OF CREDIT CARD UNDER $1000 Credit Card Frau	S	OPEN - MORE INVESTIGATION	OPEN-MORE INVESTIGATION		BALLENGER, STEVEN
20005969	**10/03/2020**	**1539**	**1400 SE GATEWAY DR**		**COMMERCIAL/OFFICE BUILDING**		**SA**	**SA**
	1	714.2(5)	THEFT 5TH DEGREE -- Other Means Under $200	S	SUSPENDED			BACH, BRYAN
20005975	**10/04/2020**	**1223**	**2308 SE 7TH LN**		**RESIDENCE/HOME**		**SA**	**SU**
	1	714.2(5)	THEFT 5TH DEGREE -- Other Means Under $200	S	SUSPENDED			HAKE, MICHAEL
20005976	**10/04/2020**	**1307**	**3600 SE GATEWAY DR**		**RENTAL/STORAGE FACILITY**		**TH**	**SU**
	1	713.6A(1)	BURGLARY 3RD DEGREE	S	SUSPENDED	SUSPENDED		KINNEY, PHILIP
20005980	**10/04/2020**	**1628**	**E 1ST ST / N JAMES ST**		**HIGHWAY/ROAD/ALLEY**		**SU**	**SU**
	1	321.266(2)	REPORTING ACCIDENTS - DAMAGE > $1000	S	SUSPENDED			MCATEE, JESSE
20005982	**10/04/2020**	**2021**	**811 SE CROSSINGS LN**		**HIGHWAY/ROAD/ALLEY**		**SU**	**SU**
	1	708.2(2)	ASSAULT CAUSING BODILY INJURY OR MENTAL ILLNESS	S	CLEARED BY ARREST		CLEARED BY ARREST	LOWRY, STEVEN

inci id	DateRept/ ChrgCnt	HourRept / ArrChrg	Address/ Charge Desc	Charge Type	Premise/ CS Status	Invst Stats	DOW1/ Dispostn	DOW2 / Officer
20005986	**10/05/2020**	**0149**	**3160 SE GRIMES BLVD**		**COMMERCIAL/OFFICE BUILDING**		**MO**	**MO**
	1	999	INFORMATION		SUSPENDED			HADSALL, MATTHEW
20005990	**10/05/2020**	**0816**	**700 SE CROSSINGS LN**		**RESIDENCE/HOME**		**SA**	**MO**
	1	713.6A(1)	BURGLARY 3RD DEGREE	S	SUSPENDED			KINNEY, PHILIP
20005991	**10/05/2020**	**0938**	**1050 SW BROOKSIDE CIR**		**COMMERCIAL/OFFICE BUILDING**		**TH**	**MO**
	1	714.9	FRAUDULENT PRACTICE 1ST DEGREE -- Other Means, over $10,000	S	OPEN - MORE INVESTIGATION	OPEN-MORE INVESTIGATION		DAUTOVIC, MEVLID
20005999	**10/05/2020**	**1245**	**3600 SE GATEWAY DR**		**RENTAL/STORAGE FACILITY**		**TH**	**MO**
	1	713.6A(1)	BURGLARY 3RD DEGREE	S	SUSPENDED	SUSPENDED		DAUTOVIC, MEVLID
20006006	**10/05/2020**	**1906**	**1405 SE 28TH ST**		**CONSTRUCTION SITE**		**FR**	**MO**
	1	713.6A(1)	BURGLARY 3RD DEGREE	S	OPEN - MORE INVESTIGATION	OPEN-MORE INVESTIGATION		DOVE, JEREMY
20006008	**10/05/2020**	**1907**	**301 NW 10TH CIR**		**RESIDENCE/HOME**		**SA**	**MO**
	1	708.7(2)	HARASSMENT - 1ST DEGREE - Threaten Forcible Felony	S	SUSPENDED			MONTAVON, CHALENA
20006010	**10/05/2020**	**1841**	**1000 SE 11TH ST**		**RESIDENCE/HOME**		**SU**	**MO**
	1	664A.7(1)	CONTEMPT - VIOLATION OF NO CONTACT/PROTECTIVE ORDER	S	SUSPENDED			DOVE, JEREMY

inci id	DateRept/ ChrgCnt	HourRept / ArrChrg	Address/ Charge Desc	Charge Type	Premise/ CS Status	Invst Stats	DOW1/ Dispostn	DOW2 / Officer
20006015	**10/06/2020**	**0921**	**2000 SE 37TH ST**		**COMMERCIAL/OFFICE BUILDING**		**MO**	**TU**
	1	713.6A(1)	BURGLARY 3RD DEGREE	S	SUSPENDED	SUSPENDED		DAUTOVIC, MEVLID
20006016	**10/06/2020**	**1017**	**2000 SE 37TH ST**		**COMMERCIAL/OFFICE BUILDING**		**MO**	**TU**
	1	713.6A(1)	BURGLARY 3RD DEGREE	S	OPEN - MORE INVESTIGATION	OPEN-MORE INVESTIGATION		DAUTOVIC, MEVLID
	2	714.2(1)	THEFT 1ST DEGREE	S	OPEN - MORE INVESTIGATION	OPEN-MORE INVESTIGATION		DAUTOVIC, MEVLID
20006019	**10/06/2020**	**0935**	**2300 SE 37TH ST**		**COMMERCIAL/OFFICE BUILDING**		**MO**	**TU**
	1	713.6A(2)	BURGLARY 3RD DEGREE - MOTOR VEHICLE, 1st Offense	S	SUSPENDED	SUSPENDED		KINNEY, PHILIP
20006030	**10/06/2020**	**1725**	**310 SE GATEWAY DR**		**RESIDENCE/HOME**		**TU**	**TU**
	1	714.2(5)	THEFT 5TH DEGREE -- Other Means Under $200	S	OPEN - MORE INVESTIGATION	OPEN-MORE INVESTIGATION		MONTAVON, CHALENA
20006036	**10/06/2020**	**2114**	**1109 NW GABUS CIR**		**RESIDENCE/HOME**		**TU**	**TU**
	1	509I	WANTED PERSON - OTHER IOWA		CLEARED BY ARREST		CLEARED BY ARREST	MONTAVON, CHALENA
20006042	**10/07/2020**	**0351**	**3103 SE COVENANT DR**		**RESIDENCE/HOME**		**WE**	**WE**
	1	708.2A(2)(b)	DOMESTIC ABUSE ASSAULT- INJURY OR MENTAL ILLNESS - 1ST OFFEN	S	CLEARED BY ARREST		CLEARED BY ARREST	SCHUTTE, ROBERT

inci id	DateRept/ ChrgCnt	HourRept / ArrChrg	Address/ Charge Desc	Charge Type	Premise/ CS Status	Invst Stats	DOW1/ Dispostn	DOW2 / Officer
	2	509P	WANTED PERSON - POLK COUNTY WARRANT		CLEARED BY ARREST		CLEARED BY ARREST	SCHUTTE, ROBERT
20006075	**10/08/2020**	**1135**	**209 NW 8TH ST**		**RESIDENCE/HOME**		**TH**	**TH**
	1	664A.7(5)	VIOLATION OF NO CONTACT OR PROTECTIVE ORDER	S	CLEARED BY ARREST		CLEARED BY ARREST	DAUTOVIC, MEVLID
20006081	**10/08/2020**	**1506**	**661 SE EWING ST**		**RESIDENCE/HOME**		**TH**	**TH**
	1	999	DOA - DEATH INVESTIGATION		OPEN - MORE INVESTIGATION	OPEN-MORE INVESTIGATI ON		ARNOLD, BRYCE
20006084	**10/08/2020**	**1854**	**2150 E 1ST ST**		**DEPARTMENT/DISCOUNT STORE**		**TH**	**TH**
	1	714.2(5)	THEFT 5TH DEGREE -- Other Means Under $200	S	CLEARED BY ARREST		CLEARED BY ARREST	MONTAVON, CHALENA
20006087	**10/08/2020**	**2214**	**SE 37TH ST / SE GRIMES BLVD**		**HIGHWAY/ROAD/ALLEY**		**TH**	**TH**
	1	321.266(2)	REPORTING ACCIDENTS - DAMAGE > $1000	S	CASE FILED			KRILE, CHALENA
20006091	**10/09/2020**	**0019**	**200 S JAMES ST**		**GOVERNMENT/PUBLIC BUILDING**		**FR**	**FR**
	1	509P	WANTED PERSON - POLK COUNTY WARRANT		CLEARED BY ARREST		CLEARED BY ARREST	WARD, GREGORY
20006103	**10/09/2020**	**1500**	**SE 35TH ST / SE STONEGATE DR**		**HIGHWAY/ROAD/ALLEY**		**FR**	**FR**
	1	321.266(2)	REPORTING ACCIDENTS - DAMAGE > $1000	S	CASE FILED			ARNOLD, BRYCE
20006105	**10/09/2020**	**2123**	**705 SE SILKWOOD LN**		**RESIDENCE/HOME**		**FR**	**FR**
	1	999	MENTAL CASE		CASE FILED			MONTAVON, CHALENA

inci id	DateRept/ ChrgCnt	HourRept / ArrChrg	Address/ Charge Desc	Charge Type	Premise/ CS Status	Invst Stats	DOW1/ Dispostn	DOW2 / Officer
20006107	**10/10/2020**	**0116**	**2600-B SE ENTERPRISE DR**		**HIGHWAY/ROAD/ALLEY**		**SA**	**SA**
	1	714.2(1)	THEFT 1ST DEGREE	S	CLEARED BY ARREST		CLEARED BY ARREST	HADSALL, MATTHEW
	2	124.414	POSSESSION OF DRUG PARAPHERNALIA	S	CLEARED BY ARREST		CLEARED BY ARREST	HADSALL, MATTHEW
	3	321.561	DRIVING WHILE BARRED - HABITUAL OFFENDER	S	CLEARED BY ARREST		CLEARED BY ARREST	HADSALL, MATTHEW
20006120	**10/11/2020**	**0154**	**2904 SE VICTORY DR**		**HIGHWAY/ROAD/ALLEY**		**SU**	**SU**
	1	321.262	LEAVE SCENE OF ACCIDENT - PROPERTY DAMAGE ONLY	S	SUSPENDED			HADSALL, MATTHEW
20006127	**10/11/2020**	**1614**	**2800-B SE GRIMES BLVD**		**HIGHWAY/ROAD/ALLEY**		**SU**	**SU**
	1	321.266(2)	REPORTING ACCIDENTS - DAMAGE > $1000	S	CASE FILED			ARNOLD, BRYCE
20006128	**10/11/2020**	**1841**	**2150 E 1ST ST**		**DEPARTMENT/DISCOUNT STORE**		**SA**	**SU**
	1	714.2(5)	THEFT 5TH DEGREE -- Other Means Under $200	S	OPEN - MORE INVESTIGATION	OPEN-MORE INVESTIGATION		RINIKER, MICHAEL
20006137	**10/12/2020**	**0841**	**SE 37TH ST / SE GRIMES BLVD**		**HIGHWAY/ROAD/ALLEY**		**MO**	**MO**
	1	321.266(2)	REPORTING ACCIDENTS - DAMAGE > $1000	S	CASE FILED			HAKE, MICHAEL
20006158	**10/12/2020**	**2116**	**2250 E 1ST ST**		**COMMERCIAL/OFFICE BUILDING**		**MO**	**MO**
	1	716.8(1)	TRESPASS 1ST OFFENSE- Knowingly Trespass Upon Property of A	S	SUSPENDED			ARCURI, CHRISTIE

inci id	DateRept/ ChrgCnt	HourRept / ArrChrg	Address/ Charge Desc	Charge Type	Premise/ CS Status	Invst Stats	DOW1/ Dispostn	DOW2 / Officer
20006172	**10/13/2020**	**1043**	**351 SE GATEWAY DR**		**GROCERY/SUPERMARKET**		**TU**	**TU**
	1	999	SICK AND CARE		CASE FILED			KINNEY, PHILIP
20006179	**10/13/2020**	**1545**	**2555 W 1ST ST**		**SCHOOL/COLLEGE**		**TU**	**TU**
	1	321.266(2)	REPORTING ACCIDENTS - DAMAGE > $1000	S	CASE FILED			KRILE, CHALENA
20006189	**10/14/2020**	**0854**	**2900 SW BROOKSIDE DR**		**COMMERCIAL/OFFICE BUILDING**		**WE**	**WE**
	1	321.266(2)	REPORTING ACCIDENTS - DAMAGE > $1000	S	CASE FILED			DAUTOVIC, MEVLID
20006197	**10/14/2020**	**1310**	**E 1ST ST / N JAMES ST**		**HIGHWAY/ROAD/ALLEY**		**WE**	**WE**
	1	321.266(2)	REPORTING ACCIDENTS - DAMAGE > $1000	S	CASE FILED			DAUTOVIC, MEVLID
20006198	**10/14/2020**	**1353**	**2150 E 1ST ST**		**DEPARTMENT/DISCOUNT STORE**		**WE**	**WE**
	1	999	INFORMATION		SUSPENDED			KINNEY, PHILIP
20006201	**10/14/2020**	**1729**	**1650 SE 37TH ST**		**COMMERCIAL/OFFICE BUILDING**		**WE**	**WE**
	1	714.10(1)(a)	FRAUDULENT PRACTICE 2ND DEGREE -- Other Means, Over $1,000 U	S	SUSPENDED			RINIKER, MICHAEL
20006202	**10/14/2020**	**1642**	**3700-B SE GRIMES BLVD**		**HIGHWAY/ROAD/ALLEY**		**WE**	**WE**
	1	321.561	DRIVING WHILE BARRED - HABITUAL OFFENDER	S	CLEARED BY ARREST		CLEARED BY ARREST	MONTAVON, CHALENA
	2	321.20B	FAILURE TO PROVIDE PROOF OF FINANCIAL LIABILITY No Accident	S	CLEARED BY ARREST		CLEARED BY ARREST	MONTAVON, CHALENA
	3	509P	WANTED PERSON - POLK COUNTY WARRANT		CLEARED BY ARREST		CLEARED BY ARREST	MONTAVON, CHALENA

inci id	DateRept/ ChrgCnt	HourRept / ArrChrg	Address/ Charge Desc	Charge Type	Premise/ CS Status	Invst Stats	DOW1/ Dispostn	DOW2 / Officer
	4	IMPOUND - NO HOLD	IMPOUND - NO HOLD	M	CLEARED BY ARREST		CLEARED BY ARREST	MONTAVON, CHALENA
20006221	**10/15/2020**	**1615**	**1120 SE 11TH ST**		**RESIDENCE/HOME**		**TH**	**TH**
	1	714.2(5)	THEFT 5TH DEGREE -- Other Means Under $200	S	SUSPENDED			MONTAVON, CHALENA
20006223	**10/15/2020**	**1952**	**2150 E 1ST ST**		**DEPARTMENT/DISCOUNT STORE**		**FR**	**TH**
	1	714.2(5)	THEFT 5TH DEGREE -- Other Means Under $200	S	OPEN - MORE INVESTIGATION	OPEN-MORE INVESTIGATION		ARNOLD, BRYCE
20006230	**10/16/2020**	**0752**	**3900-B SE BEISSER DR**		**COMMERCIAL/OFFICE BUILDING**		**FR**	**FR**
	1	124.401 (5)D	POSSESSION OF A CONTROLLED SUBSTANCE, 3RD OR SUBSEQUENT OFFE	S	EXCEPTIONALLY CLEARED		WARRANT ISSUED	BALLENGER, STEVEN
	2	124.414	POSSESSION OF DRUG PARAPHERNALIA	S	EXCEPTIONALLY CLEARED		WARRANT ISSUED	BALLENGER, STEVEN
20006231	**10/16/2020**	**0919**	**1411 NE CEDARWOOD DR**		**RESIDENCE/HOME**		**TH**	**FR**
	1	713.6A(1)	BURGLARY 3RD DEGREE	S	OPEN - MORE INVESTIGATION	OPEN-MORE INVESTIGATION		HOMEISTER, WESLEY
20006243	**10/16/2020**	**2016**	**2150 E 1ST ST**		**DEPARTMENT/DISCOUNT STORE**		**FR**	**FR**
	1	714.2(5)	THEFT 5TH DEGREE -- Other Means Under $200	S	OPEN - MORE INVESTIGATION	OPEN-MORE INVESTIGATION		MONTAVON, CHALENA

inci id	DateRept/ ChrgCnt	HourRept / ArrChrg	Address/ Charge Desc	Charge Type	Premise/ CS Status	Invst Stats	DOW1/ Dispostn	DOW2 / Officer
20006246	**10/17/2020**	**0341**	**1905 SE 37TH ST**		**HIGHWAY/ROAD/ALLEY**		**SA**	**SA**
	1	321J.2(2)(a)	OPERATING WHILE UNDER THE INFLUENCE 1ST OFFENSE	S	CLEARED BY ARREST		CLEARED BY ARREST	GOOD, ADAM
	2	321J.21	DRIVING WHILE LICENSE DENIED OR REVOKED (SRMS)	S	CLEARED BY ARREST		CLEARED BY ARREST	GOOD, ADAM
	3	509P	WANTED PERSON - POLK COUNTY WARRANT		CLEARED BY ARREST		CLEARED BY ARREST	GOOD, ADAM
20006250	**10/17/2020**	**0937**	**W 1ST ST / JAZZWOOD DR NW**		**HIGHWAY/ROAD/ALLEY**		**FR**	**SA**
	1	321.288(1)	FAILURE TO MAINTAIN CONTROL	S	SUSPENDED			BALLENGER, STEVEN
20006256	**10/17/2020**	**2228**	**951 SE GATEWAY DR**		**CONVENIENCE STORE**		**SA**	**SA**
	1	321J.2(2)(a)	OPERATING WHILE UNDER THE INFLUENCE 1ST OFFENSE	S	CLEARED BY ARREST		CLEARED BY ARREST	ARNOLD, BRYCE
	2	321.284	OPEN CONTAINER - DRIVER > 21 OPEN CONTAINER - DRIVER > 21	S	CLEARED BY ARREST		CLEARED BY ARREST	ARNOLD, BRYCE
20006257	**10/17/2020**	**2101**	**2150 E 1ST ST**		**DEPARTMENT/DISCOUNT STORE**		**SA**	**SA**
	1	714.2(5)	THEFT 5TH DEGREE -- Other Means Under $200	S	OPEN - MORE INVESTIGATION	OPEN-MORE INVESTIGATION		MONTAVON, CHALENA
20006262	**10/15/2020**	**0031**	**SE 37TH ST / SE GRIMES BLVD**		**HIGHWAY/ROAD/ALLEY**		**TH**	**TH**
	1	999	INFORMATION		SUSPENDED			GOOD, ADAM
20006284	**10/18/2020**	**2056**	**E 1ST ST / SE GATEWAY DR**		**HIGHWAY/ROAD/ALLEY**		**SU**	**SU**
	1	321.266(2)	REPORTING ACCIDENTS - DAMAGE > $1000	S	CASE FILED			JOHNSON, BRIAN

inci id	DateRept/ ChrgCnt	HourRept / ArrChrg	Address/ Charge Desc	Charge Type	Premise/ CS Status	Invst Stats	DOW1/ Dispostn	DOW2 / Officer
20006285	**10/18/2020**	**2126**	**208 NE 2ND ST**		**RESIDENCE/HOME**		**SU**	**SU**
	1	999	MENTAL CASE		CASE FILED			ARNOLD, BRYCE
20006297	**10/19/2020**	**1104**	**NE BEAVERBROOKE BLVD / NE GRIMES BLVD**		**HIGHWAY/ROAD/ALLEY**		**MO**	**MO**
	1	321.266(2)	REPORTING ACCIDENTS - DAMAGE > $1000	S	CASE FILED			BALLENGER, STEVEN
20006307	**10/19/2020**	**1616**	**NE BEAVERBROOKE BLVD / NE GRIMES BLVD**		**HIGHWAY/ROAD/ALLEY**		**MO**	**MO**
	1	321.266(2)	REPORTING ACCIDENTS - DAMAGE > $1000	S	CASE FILED			ARNOLD, BRYCE
20006310	**10/19/2020**	**1857**	**1000-B SW 19TH ST**				**MO**	**MO**
								RINIKER, MICHAEL
20006321	**10/20/2020**	**0934**	**308 SE CEDARWOOD DR**		**RESIDENCE/HOME**		**SA**	**TU**
	1	999	INFORMATION		SUSPENDED			HAKE, MICHAEL
20006333	**10/20/2020**	**1544**	**NW 142ND ST / NW 70TH AVE**		**HIGHWAY/ROAD/ALLEY**		**TU**	**TU**
	1	321.266(2)	REPORTING ACCIDENTS - DAMAGE > $1000	S	CASE FILED			MAY, JOHN
20006344	**10/21/2020**	**0225**	**1208 NE 21ST ST**		**RESIDENCE/HOME**		**TU**	**WE**
	1	694.1(4)	RUNAWAY	S	SUSPENDED			HADSALL, MATTHEW
	2	999	RECOVERY OF RUNAWAY		SUSPENDED			HADSALL, MATTHEW
20006345	**10/21/2020**	**0906**	**219 NW 3RD ST**		**RESIDENCE/HOME**		**WE**	**WE**
	1	999	VERBAL DOMESTIC	M	CASE FILED			DAUTOVIC, MEVLID

inci id	DateRept/ ChrgCnt	HourRept / ArrChrg	Address/ Charge Desc	Charge Type	Premise/ CS Status	Invst Stats	DOW1/ Dispostn	DOW2 / Officer
20006353	**10/21/2020**	**1800**	**800 S JAMES ST**		**OTHER/UNKNOWN**		**WE**	**WE**
	1	999	INFORMATION		SUSPENDED			MONTAVON, CHALENA
20006361	**10/22/2020**	**1043**	**1213 SW 4TH ST**		**RESIDENCE/HOME**		**WE**	**TH**
	1	708.7(4)	HARASSMENT - 3RD DEGREE - Communicate	S	SUSPENDED			DAUTOVIC, MEVLID
20006364	**10/22/2020**	**1322**	**LITTLE BEAVER CT**		**HIGHWAY/ROAD/ALLEY**		**TH**	**TH**
	1	321.263	LEAVE SCENE OF ACCIDENT - FAIL TO PROVIDE AID OR INFORMATION	S	OPEN - MORE INVESTIGATION	OPEN-MORE INVESTIGATION		KINNEY, PHILIP
20006369	**10/22/2020**	**1422**	**512 NE MAIN ST**		**COMMERCIAL/OFFICE BUILDING**		**TU**	**TH**
	1	714.2(2)	THEFT 2ND DEGREE -- General Over $1,000 Under $10,000	S	OPEN - MORE INVESTIGATION	OPEN-MORE INVESTIGATION		DAUTOVIC, MEVLID
20006375	**10/22/2020**	**2157**	**2150 E 1ST ST**		**DEPARTMENT/DISCOUNT STORE**		**TH**	**TH**
	1	714.2(5)	THEFT 5TH DEGREE -- Other Means Under $200	S	OPEN - MORE INVESTIGATION	OPEN-MORE INVESTIGATION		RINIKER, MICHAEL
20006390	**10/23/2020**	**1725**	**2150 E 1ST ST**		**DEPARTMENT/DISCOUNT STORE**		**FR**	**FR**
	1	714.13	FRAUDULENT PRACTICE 5TH DEGREE -- Other Means Under $200	S	OPEN - MORE INVESTIGATION	OPEN-MORE INVESTIGATION		ARNOLD, BRYCE

inci id	DateRept/ ChrgCnt	HourRept / ArrChrg	Address/ Charge Desc	Charge Type	Premise/ CS Status	Invst Stats	DOW1/ Dispostn	DOW2 / Officer
20006395	**10/23/2020**	**2145**	**3105 SE LIBERTY DR**		**HIGHWAY/ROAD/ALLEY**		**FR**	**FR**
	1	321.262	LEAVE SCENE OF ACCIDENT - PROPERTY DAMAGE ONLY	S	OPEN - MORE INVESTIGATION	OPEN-MORE INVESTIGATION		ARNOLD, BRYCE
	2	321.266(2)	REPORTING ACCIDENTS - DAMAGE > $1000	S	OPEN - MORE INVESTIGATION	OPEN-MORE INVESTIGATION		ARNOLD, BRYCE
20006407	**10/24/2020**	**1218**	**601 SE DOVETAIL RD**		**RESIDENCE/HOME**		**SA**	**SA**
	1	711.1(1)(a)	ROBBERY 1ST DEGREE -- Armed w/ Dangerous Weapon	S	SUSPENDED			BALLENGER, STEVEN
20006408	**10/24/2020**	**1423**	**101 NE HARVEY ST**		**GOVERNMENT/PUBLIC BUILDING**		**SA**	**SA**
	1	PROPC	CONFISCATED PROPERTY		SUSPENDED			CAHILL, DEVAN
20006412	**10/24/2020**	**1832**	**1900 SE 37TH ST**		**HIGHWAY/ROAD/ALLEY**		**SA**	**SA**
	1	124.401(5)	POSSESSION OF A CONTROLLED SUBSTANCE	S	CLEARED BY ARREST		CLEARED BY ARREST	MONTAVON, CHALENA
20006413	**10/24/2020**	**2102**	**1355 SE 6TH ST**		**RESIDENCE/HOME**		**SA**	**SA**
	1	708.7(4)	HARASSMENT - 3RD DEGREE - Communicate	S	SUSPENDED			MONTAVON, CHALENA
20006416	**10/25/2020**	**0234**	**3160 SE GRIMES BLVD**		**COMMERCIAL/OFFICE BUILDING**		**SU**	**SU**
	1	999	SUSPICIOUS ACTIVITY	M	OPEN - MORE INVESTIGATION	OPEN-MORE INVESTIGATION		GOOD, ADAM
20006420	**10/25/2020**	**1247**	**FLYOVER FROM I80 / HWY 141 GRIMES**		**HIGHWAY/ROAD/ALLEY**		**SU**	**SU**
	1	321.266(2)	REPORTING ACCIDENTS - DAMAGE > $1000	S	CASE FILED			DOVE, JEREMY

inci id	DateRept/ ChrgCnt	HourRept / ArrChrg	Address/ Charge Desc	Charge Type	Premise/ CS Status	Invst Stats	DOW1/ Dispostn	DOW2 / Officer
20006429	**10/25/2020**	**2203**	**NE BEAVERBROOKE BLVD / NE HERITAGE DR**		**HIGHWAY/ROAD/ALLEY**		**SU**	**SU**
	1	321.263	LEAVE SCENE OF ACCIDENT - FAIL TO PROVIDE AID OR INFORMATION	S	SUSPENDED			ARNOLD, BRYCE
	2	321.288(1)	FAILURE TO MAINTAIN CONTROL	S	SUSPENDED			ARNOLD, BRYCE
	3	321.266(2)	REPORTING ACCIDENTS - DAMAGE > $1000	S	SUSPENDED			ARNOLD, BRYCE
20006466	**10/26/2020**	**1759**	**800 S JAMES ST**				**MO**	**MO**
								ARNOLD, BRYCE
20006467	**10/26/2020**	**1829**	**600 SE DOVETAIL RD**		**RESIDENCE/HOME**		**MO**	**MO**
	1	714.2(1)	THEFT 1ST DEGREE	S	EXCEPTIONALLY CLEARED		PROSECUTION DECLINED	GOOD, ADAM
	2	321.256	FAIL TO OBEY TRAFFIC CONTROL DEVICE	S	EXCEPTIONALLY CLEARED		PROSECUTION DECLINED	GOOD, ADAM
	3	321.174(1)	NO VALID DRIVERS LICENSE	S	EXCEPTIONALLY CLEARED		PROSECUTION DECLINED	GOOD, ADAM
20006468	**10/26/2020**	**2033**	**421 SE GATEWAY DR**		**RESIDENCE/HOME**		**MO**	**MO**
	1	711.4(1)(c)	EXTORTION -- Expose to Ridicule/Hatred/Contempt	S	SUSPENDED			GOOD, ADAM
20006490	**10/27/2020**	**1631**	**2403 NE 12TH ST**		**RESIDENCE/HOME**		**SA**	**TU**
	1	711.4(1)(c)	EXTORTION -- Expose to Ridicule/Hatred/Contempt	S	OPEN - MORE INVESTIGATION	OPEN-MORE INVESTIGATION		ARNOLD, BRYCE
20006496	**10/27/2020**	**2015**	**2150 E 1ST ST**				**TU**	**TU**
								ARCURI, CHRISTIE

inci id	DateRept/ ChrgCnt	HourRept / ArrChrg	Address/ Charge Desc	Charge Type	Premise/ CS Status	Invst Stats	DOW1/ Dispostn	DOW2 / Officer
20006521	**10/28/2020**	**1704**	**W 1ST ST / NW CALISTA CT**		**HIGHWAY/ROAD/ALLEY**		**WE**	**WE**
	1	321.561	DRIVING WHILE BARRED - HABITUAL OFFENDER	S	CLEARED BY ARREST		CLEARED BY ARREST	NYSTROM, KIRSTEN
	2	509I	WANTED PERSON - OTHER IOWA		CLEARED BY ARREST		CLEARED BY ARREST	NYSTROM, KIRSTEN
20006523	**10/28/2020**	**1727**	**3000 SE COVENANT DR**		**RESIDENCE/HOME**		**WE**	**WE**
	1	PROPC	CONFISCATED PROPERTY		SUSPENDED			ARNOLD, BRYCE
20006526	**10/28/2020**	**2044**	**1101 NE JACOB ST**		**HIGHWAY/ROAD/ALLEY**		**WE**	**WE**
	1	321.266(2)	REPORTING ACCIDENTS - DAMAGE > $1000	S	CASE FILED			NYSTROM, KIRSTEN
20006527	**10/28/2020**	**2158**	**1705 NW MORNINGSIDE DR**		**RESIDENCE/HOME**		**WE**	**WE**
	1	999	MENTAL CASE		CASE FILED			ARNOLD, BRYCE
20006529	**10/29/2020**	**0230**	**5150 NE 100TH ST**		**SERVICE/GAS STATION**		**TH**	**TH**
	1	509P	WANTED PERSON - POLK COUNTY WARRANT		CLEARED BY ARREST		CLEARED BY ARREST	DAWSON, JOSHUA
20006531	**10/29/2020**	**0447**	**1301 SE GATEWAY DR**		**COMMERCIAL/OFFICE BUILDING**		**WE**	**TH**
	1	321.262	LEAVE SCENE OF ACCIDENT - PROPERTY DAMAGE ONLY	S	OPEN - MORE INVESTIGATION	OPEN-MORE INVESTIGATION		SMITH, NICHOLAS
20006540	**10/29/2020**	**1400**	**2150 E 1ST ST**		**DEPARTMENT/DISCOUNT STORE**		**TH**	**TH**
	1	321.266(2)	REPORTING ACCIDENTS - DAMAGE > $1000	S	CASE FILED			AIKEN, JAMIE

inci id	DateRept/ ChrgCnt	HourRept / ArrChrg	Address/ Charge Desc	Charge Type	Premise/ CS Status	Invst Stats	DOW1/ Dispostn	DOW2 / Officer
20006555	**10/30/2020**	**0838**	**3711 SE CAPITOL CIR**				**FR**	**FR**
								DAUTOVIC, MEVLID
20006566	**10/30/2020**	**1223**	**303 SW CREEKSIDE CT**				**FR**	**FR**
								DAUTOVIC, MEVLID
20006574	**10/30/2020**	**1823**	**SE 28TH ST / SE GATEWAY DR**				**FR**	**FR**
								DAUTOVIC, MEVLID
20006581	**10/31/2020**	**0907**	**100-B E 1ST ST**				**SA**	**SA**
								MCATEE, JESSE
20006586	**10/31/2020**	**2011**	**3013 SE GLENSTONE DR**				**SA**	**SA**
								BACH, BRYAN
20006588	**10/31/2020**	**2230**	**509 NE 8TH ST**				**SA**	**SA**
								LEWELLIN, LARRY
20006589	**10/31/2020**	**2230**	**509 NE 8TH ST**				**SA**	**SA**
								LEWELLIN, LARRY